infobit

PRODUCT CATALOGUE 2026 V1.3

Updated on: Jan 22, 2026

PRODUCTS CONTENT

AV Processing 14

AV over IP 26

Audio Video Control 32

Video Distribution 36

Extenders & Connectivity 48

KVM Solutions 72

UC Hub 77

Digital Conference 80

BYOD and BYOM 85

PRODUCTS CONTENT

Meeting Group 90

Meeting Camera 92

Mic & Speaker 101

Meeting Room PC 112

Headset 114

Dante Audio 116

Audio Distribution 128

Embedders/De-Embedders 132

SDI Distribution 136

PRODUCTS CONTENT

USB Capture 139

Displays 142

Stand & Mounts 145

Cables & Adapters 151

Testing Tools 163

Wireless Charging 165

ABOUT US

INFOBIT is a leading manufacturer of professional audio video (ProAV) transmission/switching, wireless collaboration systems, cables, and video wall control technology.

INFOBIT's mission is to offer the most innovative and cost-effective solutions for our customers who are looking for agile collaboration technologies to transform the way people connect and communicate.

Founded in 2009, the company has a long list of industry firsts. It leverages its extensive R&D activities to bring its integrator and designer partners the latest cutting-edge features and functionality.

”OUR TECHNOLOGY AND AUDIO-VISUAL SOLUTIONS POWER CREATIVITY, PRODUCTIVITY, EXPRESSION, AND CONNECTION,

AND OUR PEOPLE ARE THE CORNERSTONE OF THAT PROMISE.”

OUR MISSION

INFOBIT's mission is to offer the most innovative and cost-effective solutions for our customers who are looking for agile collaboration technologies to transform the way people connect and communicate.

2025
OUR GLOBAL NETWORK

JOIN OUR GLOBAL NETWORK

We're looking for involved and dedicated partners of both distributors and direct dealers intended to establish and maintain a long-lasting relationship.

Increase your profits with our exclusive partner discounts. Gain extra earning potential with growth.

New distributors are welcomed. Let's lower your inventory, reduce your warehouse cost, and increase your inventory turns.

INFOBIT

- United Kingdom (HQ)
- Singapore (Asian Center)
- China (Supply Chain)

Distributors

Europe
- Belarus
- Croatia
- Czech Republic
- Denmark
- Finland
- France
- Germany
- Hungary
- Italy
- Poland
- Portugal
- Romania
- Russia
- Serbia
- Sweden
- Switzerland
- Turkey
- Ukraine
- Malta
- Moldova
- Netherland
- Norway
- Spain
- Malta

Middle East
- Bahrain
- Iraq
- Iran
- Israel
- Jordan
- Kuwait
- Oman
- Qatar
- Saudi Arabia
- UAE

North America
- Canada
- United States

Latin America
- Argentina
- Brazil
- Chili
- Colombia
- Peru
- Uruguay

Central Asia
- Kazakhstan

South Asia
- Bangladesh
- India
- Maldives
- Nepal
- Pakistan
- Sri Lanka

South East Asia
- Indonesia
- Malaysia
- Myanmar
- Philippines
- Singapore
- Thailand
- Vietnam

East Asia
- China
- South Korea
- Japan

Oceania
- Australia
- New Zealand

Africa
- Algeria
- Egypt
- Kenya
- Nigeria
- Morocco
- Tunisia

JOIN OUR GLOBAL NETWORK

We’re looking for involved and dedicated distributors and direct dealer partners intended to establish and maintain a long-lasting relationship.

We're focused on nurturing our partnerships.

TOGETHER, WE ARE BETTER.

CUSTOMER ORIENTED

We listen! Your feedback drives our development creating exceptional experiences.

INNOVATION MATTERS

Our brilliant team of developers and designers are always ahead of the game.

YOUR BENEFITS

INFOBIT Partner Program offers a wide range of benefits to support the goals and success of our partners.

LOWER STOCK PRESSURE

We always keep sufficient stock, and as our partner, we make sure your stock is safe by our "Quick Delivery" policy.

CONTINUOUS PROFITS

Increase your profits with our exclusive partner discounts. Gain extra earning potential with growth.

CHANNEL PROTECTION

Get more leads through digital campaigns, content marketing, and case studies. We always know how to protect your channels and projects.

TECHNICAL SUPPORT

Talk to a real person. We're ready to address queries within 24 hours in any sales cycle. "Quick Response" is our soul.

CONTACT US

Get in touch with INFOBIT AV for the latest information and special offers.

LONDON, UK

INFOBIT AV LTD.

info@infobitav.com
Fifth Floor 3 Gower Street
London WC1E 6HA

SINGAPORE

INFOBIT AV PTE. LTD.

info@infobitav.com
57 Ubi Avenue 1, #06-06 Ubi
Center, Singapore 408936

BEIJING, CHINA

INFOBIT CO., LTD.

info@infobitav.com
Liye Road, Room 602
Changping, Beijing China
102206

Buenos Aires

INFOBIT NORLAB

info@infobitav.com
Perito Moreno 3005 (CP:1754)
Villa Luzuriaga Bs. As. Argentina

AV Processing

iWall M4

Modular Video Wall Controllers

NEW

- 4 windows (layers) on each display
- 4K60Hz signal input
- Multiple video wall groups (up to 4x video walls)
- Signal preview and monitoring
- High-resolution background image
- With a touch screen on the front panel
- Supports redundant PSU (Power Supply Unit)
- Supports RS232, IP, and Web GUI controls
- Support Full HD, 4K UHD inputs, and Full HD outputs

iMatrix M

4K Modular Seamless Switching Matrix w/ Videowall

NEW

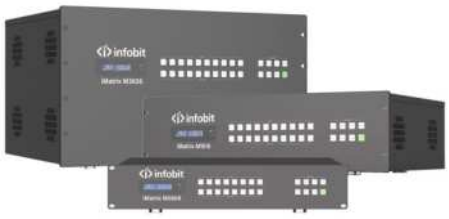

- HDMI 2.0b and HDCP 2.2 compliant
- HDMI 18Gbps bandwidth, up to 4K60 YCbCr 4:4:4 24bit
- Pure-hardware and modular design, 4 ports per card.
- Support 8x8/ 16x16/ 36x36 inputs and outputs
- Input and output supports HDMI, DVI-U (DVI/VGA/YPbPr/CVBS), VGA, 3G/HD/SD-SDI, HDBaseT and optical fiber
- Resolutions: 1920×1200p60hz (2K card), 3840x2160p60hz (4K card)
- Seamless switching without image tear, black-screen or flicker
- Gen-Lock videowall technology, the latency between any output channel is less than 0.1ms
- Any videowall layout modes in the allowed range of 8x8 ~36x36, especially suitable for LCD/LED video wall
- Built-in HDCP processing technology
- Input cards support audio-embedding, output cards support audio de-embedding
- Up to 64x of scene-presets can be recalled
- Advanced EDID management
- Control via front panel buttons, IR, RS-232, TCP/IP, Web GUI or PC software
- Silent fan design, noiseless, stable performance
- Redundant dual-power design

iWall 8K106

HDMI 8K 1x6 Video Wall Controller

NEW

- Pure-hardware, support 24x7 working.
- Supports custom output resolutions, with more than 8 million pixels.
- Supports input 4K@60Hz or 8K@30Hz
- Supports output 2K ultra-high-definition signal.
- Built-in audio de-embedding.
- The device output ports synchronized automatically without any latency.
- A single unit can output up to 6 HDMI HD signals.
- A single unit can input up to 1 HDMI UHD signal.
- Supports both landscape and portrait video walls.
- Supports cascading.

iWall 104C

HDMI 4K60 1x4 Video Wall Controller, w/ USB C

NEW

- 1x HDMI IN, 1x USB C IN, 4x HDMI OUT
- HDMI 2.0, HDCP 2.2 and DP1.2a compliant
- Support HDMI and USB-C inputs, resolution up to 4K@60Hz 4:4:4, not working simultaneously
- Support optical and L/R analog audio de-embedding outputs
- Support 8x video wall modes: 1x1, 2x1, 3x1, 4x1, 1x2, 1x3, 1x4, 2x2
- Support image 180° rotation, convenient for ceiling installation
- Support bezel adjustment
- Control via front panel buttons, IR remote and RS-232

iWall X

1080P HDMI Video Wall Controller

HOT

- 4x4, 4x8, 8x8, 4x12 HDMI Video Wall Controllers
- 4x video overlay windows per display
- Video windows zoom in, zoom out, moving, overlay, roaming, resizing and switching
- Presets saving and auto-switching
- Video cropping & Scrolling text
- Embedded HDMI audio in all inputs
- 1x de-embedded audio from any input
- Drag-and-drop software operation
- Seamless switching without any blank intervals
- TCP/IP, RS232 Control

iWall 104P

4K60 1x4 Video Wall Controller with Portrait Mode

- Supports 2 inputs, resolution up to 4K60.
- Outputs support image 90°, 180°, and 270° rotation, compatible with both landscape and portrait videowall installation.
- Supports 4 HDMI with 1920*1200@60Hz resolution outputs.
- Supports multiple videowall layouts: 2x2, 1x4, 4x1, 1x3 ...
- Supports the videowall edge adjustment.
- Supports HDMI 2.0, HDCP compatible.
- Supports the IR remote, push-button and RS232

iWall 109

1x9 4K30 Video Wall Controller

- Support HDMI input
- Support 9 HDMI outputs
- Support multiple video wall modes, easy to operate, plug-and-play
- Support 8/10/12 bit deep color
- Support IR control

iWall 206

4K60 HDMI 2x6 Video Wall Controller

NEW

- 2×6 HDMI 4K Video Wall Contrller
- Supports quick video wall mode, including 1×4, 2×2, 3×2, 2×3, 4×1, 1×4 (90°), and 1×3 (60°), and select source between two HDMI inputs.
- Supports standard video wall mode, in which users can set M (row: M≤6) x N (column: N ≤6) ≤6 x cascade number (up to 6) video wall layout mode.
- Supports mosaic video wall mode, in which users can set any rotation angle and any shape of video wall.
- Supports HDMI 2.0 with 4K@60Hz 4:4:4 8bit, especially 3840 x 600, 5400×1920 wide-screen resolution.

iWall 204

2x4 HDMI 4K60 18Gbps Video Wall Controller

- 2x4 HDMI 4K60 18Gbps Video Wall Controller
- HDMI 2.0 and HDCP 2.2 compliant
- Support multi-resolution up to 3840x2160@60Hz video output for video wall
- Support 2 channels HDMI loop out
- Support Bezel Compensation with two modes
- Support 180 degrees rotation
- Support PIP on the video wall
- Support RS-232 and TCP/IP control
- Support CEC control

AV Processing

Compare Models

MODELS	iWall 104C	iWall 104P	iWall 8K106	iWall 109	iWall 204
Input	1x HDMI; 1x USB C	1x HDMI; 1x DP	1x HDMI	1x HDMI	2x HDMI
Input Resolution	4K60	4K60	8K30	4K30	4K60
Output	4x HDMI	4x HDMI	6x HDMI	9x HDMI	4x HDMI; 2x HDMI Loop Out
Output Resolution	1080P	1080P	1080P	1080P	4K60
Audio Out	1x L/R; 1x Optical	L/R 3.5mm	L/R 3.5mm	L/R 3.5mm	2x Stereo Output [3-pin phoenix port]; 1x L/R 3.5mm
RS232	1x	1x		1x DB9	1x Phoenix, 1x RJ45
Control	IR, Buttons	IR, Buttons		IR Remote	TCP/IP, RS232
Video Wall (Row*Col)	1x2, 2x1, 3x1, 4x1, 1x2, 1x3, 1x4, 2x2	1x3, 1x4, 2x2, 2x1, 3x1, 4x1	Any 6 screens	1x2, 1x3, 1x4, 2x1, 2x2, 2x3, 2x4, 3x1, 3x2, 3x3, 4x1, 4x2	1x3, 1x4, 2x2, 2x1, 3x1, 4x1
180° Flip	√	√		√	√
Bezel Compensat-ion	√	√		√	√
Cascading (Daisy Chain)			Yes	2pcs 109: (4x4 Video Wall)	
1-360° Rotation					
Loopout					2x HDMI Loop Out

iMatrix HU44

4K60 HDMI & USB 4x4 Matrix switcher

NEW

- 4×4 HDMI matrix
- 4×4 USB matrix
- 8×8 audio matrix
- HDMI 2.0, 4K@60Hz 4:4:4 & HDCP2.2.
- Video seamless switching.
- Provides up to 60W PD charging for USB-C.
- Switch any USB A device to any 4 of 5 USB hosts as matrix mode.
- Supports wired BYOM (Bring Your Own Meeting) to switching among Room and BYOD PC.
- Be compatible with USB videobar, camera, speaker, microphones with brands INFOBIT, Logitech, Poly, Yealink, Jabra and more

iMatrix C604

HDMI and USB C 6x4 Seamless Matrix Switcher with Dante and DSP

NEW

- Full-featured USB-C input port, supports 4K@60Hz, USB 3.1 gen1, 1G network, and PD 3.0 charging up to 60 watts.
- Supports USB host switching and USB device extension.
- Switching USB hosts include 1x USB3.0 type-C port and 2x local USB3.0 type-B ports;
- USB devices include 4x local USB 3.0 type-A ports.
- Versatile audio connection and DSP.
- 2x Mic inputs, and 1x LINE input
- Dante 4×4 with various sampling rates
- HDMI audio de-embedding with sampling frequency up to 192KHz
- Supports 2x balanced audio outputs.

iMatrix UB44

USB 3.0 4x4 Matrix w/ IP control

- USB 3.0 4x4 Matrix w/ IP control
- Support USB 3.0 gen 1
- Data transfer rates up to 5Gbps
- Backwards compatible with USB 2.0 and 1.1
- Support front panel, GUI, IR and RS232 control
- 5V900mA power supply via USB-A
- Web interface module for control and configuration
- of the iMatrix UB44
- Plug and Play

iMatrix UB44-V2

USB 3.2 Gen1 4x4 Matrix w/ IP control

NEW

- USB 5Gbps 4×4 Matrix
- Enables 4 computers to share 4 USB 3.2 Gen 1 devices
- USB 3.2 Gen 1 compliant, data transfer rates up to 5Gbps
- LED indicates which host is active
- Over-current protection
- 5V/1.5A output for USB device ports
- USB device ports compliant with USB 3.2 Gen 1, USB 2.0, and USB 1.1
- Plug and Play – no drivers or external power adapter needed
- Multi-platform support – Windows, Linux and Mac

iMatrix H44A/88A/1616A

HDMI 4K60 Matrix Swicher w/ Audio

- 4K60 HDMI 4x4, 8x8, 16x16 Matrix with Audio
- HDMI 2.0b, HDCP 2.2, and HDCP 1.4 compliant
- Video I/O: 4K2K@60Hz (YUV 4:4:4)
- Support 18Gbps video bandwidth
- Dolby Vision, HDR10+, and HLG
- 4K to 1080P Down Scaler for each output
- HDMI audio pass-through up to 7.1CH HD
- Audio de-embedded
- ARC, CEC, and smart EDID management
- Control via front panel buttons, IR remote, RS-232, LAN, and Web GUI

iMatrix H44VAW

4x4 HDMI 4K60 Seamless Matrix Switcher w/ Multiviewer and Videowall

NEW

- Support video wall, bezel compensation, 90/180 degrees rotation
- Support SINGLE, PIP, PBP, 3xWIN, 4xWIN display modes for each out
- Seamless switching under SINGLE window display mode
- Fast switching under non-SINGLE window display mode
- Support audio extract/ de-embed of each output
- Support audio embed for each input
- Support EDID management
- Front panel, RS232, TCP/IP, Web GUI control

iMatrix H44HW

4K60 4x4 Seamless Matrix Switcher w/ Videowall

NEW

- Features 2 operational modes:-4×4 Matrix (seamless switch) ;-Video wall (2×2, 4×1 or 1×4 etc configuration)
- Seamless video switching
- Video inputs support all industry standard video resolutions including VGA-WUXGA (up to 1920×1200 @60Hz) and 480i-4K (3840 x 2160 @60Hz 4:4:4, 4096 x 2160 @60Hz 4:4:4)
- HDMI outputs support upscale or downscale to any resolution, up to 4096 x 2160@60Hz 4:4:4
- Advanced EDID management
- Control via front panel, IR, RS-232 and TCP/IP

iMatrix H44HAW

4x4 HDMI 4K60 Seamless Matrix Switcher w/ Videowall

- Support video wall, bezel compensation, 90/180 degrees rotation
- Support SINGLE, PIP, PBP, 3xWIN, 4xWIN display modes for each out
- Seamless switching under SINGLE window display mode
- Fast switching under non-SINGLE window display mode
- Support audio extract/ de-embed of each output
- Support audio embed for each input
- Support EDID management
- Front panel, RS232, TCP/IP, Web GUI control

iMatrix H88HAW

8x8 HDMI 4K60 Seamless Matrix Switcher w/ Videowall

- 8x8 18Gbps HDMI 4K60 Seamless Matrix Switcher with Videowall
- HDMI 2.0 and HDCP 2.2 compliant
- Support 18 Gbps video bandwidth
- Support seamless switching
- Support video wall
- Support HDMI audio extract
- Support external L/R audio insert on HDMI stream
- Support EDID management
- HDMI video output resolution up to 3840x2160@60
- Front panel, RS232, TCP/IP (LAN 10M/100M) control

iMatrix H44AM/H88AM

HDMI 4K60 Matrix Swicher w/ Audio Matrix

- 4x4 or 8x8 HDMI 2.0 Matrix Switcher with Audio Matrix/ Downscaling/AOC Supported.
- 4x4 SPDIF+ L/R inputs, and outputs.
- Supports 4K/60 4:4:4, HDR, HDCP2.3 compliant.
- Audio Matrix, audio out can be de-embedded
- Supports 4K to 1080p down-scaling up to 4 outputs.
- Controllable by the front panel, IR, RS232, and TCP/IP.
- Note: For H44AM, the last two outputs (outputs 3 and 4) have an auto down-scaling function.
- Note: For H88AM, the last four outputs (outputs 5, 6, 7, and 8) have an auto down-scaling function.

iMatrix H44H150

4x4 HDMI 4K60 Matrix Switcher w/ HDBaseT

- 4K2K@60Hz (YUV 4:4:4) on all HDMI & HDBaseT
- 4 HDMI IN, 4 HDMI & HDBaseT mirrored outputs
- Support 18Gbps lossless compressed HDBaseT
- Support 4K->1080P Down Scaler for each out
- HDR, HDR10, HDR10+, Dolby Vision, and HLG
- HDBaseT 150m for 1080P or 120m for 4K2K
- HDMI audio pass-through
- Audio de-embedded coax ports
- 24V POC on all HDBaseT ports
- Front panel buttons, IR remote, RS-232, LAN, and Web GUI

iMatrix H88H150

8x8 HDMI 4K60 Matrix Switcher w/ HDBaseT

- HDMI 2.0b, HDCP 2.2, and HDCP 1.x compliant
- 4K2K@60Hz (YUV 4:4:4) on all HDMI & HDBaseT
- 4 HDMI IN, 4 HDMI & HDBaseT mirrored outputs
- Support 18Gbps lossless compressed HDBaseT
- Support 4K->1080P Down Scaler for each out
- HDBaseT 150m for 1080P or 120m for 4K2K
- HDMI audio pass-through
- Audio de-embedded coax ports
- 24V POC on all HDBaseT ports
- Front panel buttons, IR remote, RS-232, LAN, and Web GUI

MODELS	iMatrix H	iMatrix HA	iMatrix HW	iMatrix HAM	iMatrix HAW
4K30	√	√	√	√	√
4K60		√	√	√	√
Extract Audio		√		√	√
HDR		√	√	√	√
AOC Cable				√	
Audio Matrix				√	√
Videowall			√		√
Seamless Switching			√		√

MODELS	iMatrix H44A	iMatrix H88A	iMatrix H1616A
HDMI I/O	4x4	8x8	16x16
COAX audio out	4	8	16
L/R audio out	4	8	
HDMI Version	HDMI 2.0b, 18Gbps	HDMI 2.0b, 18Gbps	HDMI 2.0b, 18Gbps
HDCP	HDCP 2.2/1.x	HDCP 2.2/1.x	HDCP 2.2/1.x
Resolution	Up to 4K2K@60Hz (4:4:4)	Up to 4K2K@60Hz (4:4:4)	Up to 4K2K@60Hz (4:4:4)
Control Ports	1x TCP/IP; 1x RS-232; 1x IR EXT	1x TCP/IP; 1x RS-232; 1x IR EXT	1x TCP/IP; 1x RS-232; 1x IR EXT
HDR formats	HDR10,HDR10+,Dolby Vision, HLG	HDR10,HDR10+,Dolby Vision, HLG	HDR10,HDR10+,Dolby Vision, HLG

MODELS	iMatrix H44HAW	iMatrix H88HAW
HDMI I/O	4x4	8x8
Resolution	Up to 4K@60Hz 4:4:4, HDR	Up to 4K@60Hz 4:4:4, HDR
HDMI Version	Up to 2.0, 18Gbps	Up to 2.0, 18Gbps
HDCP Version	Up to 2.2	Up to 2.2
Audio Input	4x Coaxial	8x Coaxial
Audio Output	4x Coaxial; 4x Balanced analog	8x Coaxial
Control port	IR, RS232, TCP/IP and front buttons	IR, RS232, TCP/IP and front buttons
HDMI I/O	4x4	8x8
Resolution	Up to 4K@60Hz 4:4:4, HDR	Up to 4K@60Hz 4:4:4, HDR
For AOC	Provide 5V500mA to AOC cable	Provide 5V500mA to AOC cable
HDMI Version	Up to 2.0, 18Gbps	Up to 2.0, 18Gbps
HDCP Version	Up to 2.3	Up to 2.3
SPDIF audio Output	4	8
L/R Audio Output	4	8
Control port	(1) IR, (1) RS232, (1) FIRMWARE, (1) TCP/IP	(1) IR, (1) RS232, (1) FIRMWARE, (1) TCP/IP
Control Connector	(1) 3.5mm jack, (1) 3-pin terminal block, (1) USB-A, (1) RJ45	(1) 3.5mm jack, (1) 3-pin terminal block, (1) USB-A, (1) RJ45

MODELS	iMatrix H44H150	iMatrix H88H150
HDMI I/O	4x4	8x8
HDBaseT Out	4	8
HDBaseT Rx	4	8
HDBaseT distance	150m for HD, 120m for 4K	150m for HD, 120m for 4K
Resolution	Up to 4K@60Hz 4:4:4, HDR	Up to 4K@60Hz 4:4:4, HDR
HDMI Version	Up to 2.0, 18Gbps	Up to 2.0, 18Gbps
HDCP Version	Up to 2.2	Up to 2.2
Audio Input	HDMI embedded	HDMI embedded
Audio Output	4x Coaxial; 4x Balanced analog	8x Coaxial; 8x Balanced analog
Control port	IR, RS232, TCP/IP and front buttons	IR, RS232, TCP/IP and front buttons

MODELS	iMatrix H44VAW
HDMI I/O	4x4
Resolution	Up to 4K@60Hz 4:4:4, HDR
HDMI Version	Up to 2.0, 18Gbps
HDCP Version	Up to 2.2
Audio Input	4x Phoneix
Audio Output	4x Phoneix, 4x Optical
Control port	IR, RS232, TCP/IP, Web GUI, buttons
Multiviewer	Yes
With Scaller	Yes
Audio embed	Yes
Audio De-embed	Yes
Seamless Switching	Yes

MODELS	iMatrix H44VW
HDMI I/O	4x4
HDMI Version	HDMI 2.0b, 18Gbps
HDCP	HDCP 2.2/1.x
Resolution	Up to 4K2K@60Hz (4:4:4)
Control Ports	1x TCP/IP; 1x RS-232; 1x IR EXT
Color Space	RGB, YCbCr 4:4:4/4:2:2/4:2:0
Color Depth	8-bit, 10-bit, 12-bit
HDR formats	HDR10,HDR10+,Dolby Vision, HLG

AV over IP

iSwitch-SDV

SDVoE 4K60 AV over IP Transceiver with Fiber

- SDVoE 4K60 AV over IP Transceiver with Fiber
- HDMI 2.0b and HDCP 2.2 compliant
- Support video resolution up to 4k2k@60Hz 4:4:4
- Encoder and Decoder all in one.
- Support signal extension, matrix, seamless switching, Video Wall, and up to 32 windows Multi-viewer
- Built-in H.264/265 preview module
- Automatic detection of Fiber and Copper ports
- Support USB 2.0 or USB KVM (optional)
- Support RS-232, TCP/IP, IR, Web GUI, and APP control
- Support POE+ (PD mode)

iSwitch 2000

JPEG 2000 4K AV over IP with Video Wall Processing

- HDMI 2.0b, HDCP 2.2 compliant, 18Gbps video bandwidth. Input up to 4K60 4:4:4, output up to 4K30 4:4:4
- Transmit video, audio, IR, RS-232, CEC, and USB over IP
- Supports both unicast and multicast functions
- Supports point-to-point, video matrix, and video wall functions (video wall up to 9x9)
- JPEG2000 Main Stream and standard H.265 codec Secondary Stream (SS)
- Support 1G Ethernet Switch
- Support PoE
- Control through Web GUI/TCP/RS-232/IR and third-party controller

iSwitch 2000D (Dante)

HDMI 4K60 JPEG2000 AV over IP w/ Dante

HOT

- Both Input and output video up to 4K60 4:4:4
- Up to 328ft / 100m via CAT5E/6/6A/7 cable
- Transmit video, audio, IR, RS-232, CEC and USB over IP
- Integrate both Copper and Fiber ports redundancy
- Support unicast and multicast functions
- Support point-to-point, video matrix and video wall functions (video wall supports up to 9x9)
- Support MJPEG Substream real-time preview
- 1G Ethernet Switch, PoE
- Built-in Web-GUI control, Telnet and SSH as well
- Support Dante audio

iSwitch 2000D-WPT

4K60 JPEG 2000 AV over IP Wallplate Encoder, with Dante

NEW

- Support 18Gbps video bandwidth, HDCP 2.2, and DP 1.2
- Input and output video resolution is up to 4K60 4:4:4
- Signal transmission distance can be extended up to 328ft/100m via CAT6/6A/7 cable
- Transmit video, analog audio, RS-232, CEC and USB signal over Ethernet
- Support USB 2.0 and KVM function
- US 2-Gang wall-plate
- With HDMI and USB-C dual inputs, supporting auto-switching and manual switching modes
- The USB-C 1 port supports video/audio/USB data transmission and power charging.

iSwitch 265

H. 265 2K60 AV over IP with Video Wall Processing

- HDMI 1.4 and HDCP 1.4 compliant, up to 1920x1200@60Hz 4:4:4
- Distance up to 328ft / 100m
- Support point-to-point signal extension
- Support signal distribution, multicast mode, distributed matrix and video wall (up to 9x9) functions over a 1G Network Switch
- The encoder supports HDMI local loop-output
- Support audio embedding and extracting
- Support USB/KVM function
- IR/RS-232 control

iSwitch 265K

Zero-Configuration 4K AV over IP w/ Video Wall & Visual Control

HOT

- Works easily with an Ethernet switch, no configuration is required.
- Plug and play.
- Supports visual control through a tablet/cellphone.
- Supports high-efficiency video codec.
- Easy to build an IP matrix or a video wall.
- Independent RS232 routing.

iSwitch 265TR

H.264/H.265 4K60 AV over IP Transceiver with KVM and RS-232

NEW

Up to 4K60Hz (4:4:4), 18Gbps, HDMI 2.0b, HDCP 2.2
Audio formats LPCM 2.0CH 48kHz
Transceiver design of encoder and decoder, fiber and copper dual-mode
Images roaming: a unit as a decoder can process up to 16 signals, enabling arbitrary windowing, roaming, overlaying, and videowall
Supports KVM
Universal H.264/265 protocol
Support point-to-point signal extension

MODELS	iSwitch 265	iSwitch 265K	iSwitch 265TR	iSwitch 2000	iSwitch 2000D	iSwitch SDV
Protocol	H.265	H.265	H.265	JPEG 2000	JPEG 2000	SDVoE
HDMI Version	HDMI 1.4	HDMI 1.4	HDMI 2.0	HDMI 2.0b	HDMI 2.0b	HDMI 2.0b
HDCP Version	HDCP 1.4	HDCP 1.4	HDCP 2.2	HDCP 2.2	HDCP 2.2	HDCP 2.2
Bandwidth	4.95Gpbs	4.95Gpbs	18Gpbs	18Gbps	18Gbps	18Gbps
Input Resolution	1920x1200/ 60Hz 4:4:4	4K30 4:4:4	4K60 4:4:4	4K60 4:4:4	4K60 4:4:4	4K60 4:4:4
Output Resolution	1920x1200/ 60Hz 4:4:4	4K30 4:4:4	4K60 4:4:4	4K30 4:4:4	4K60 4:4:4	4K60 4:4:4
Distance	100m/ 1G network	100m/ any switch	100m/ 1G network	100m/ 1G network	100m/ 1G network	100m/ 10G network
Point-to-Point Transmission	√	√	√	√	√	√
One-to-Many Distributing	√	√	√	√	√	√
Many-to-One Switching	√	√	√	√	√	√
Many-to-Many Matrix	√	√	√	√	√	√
Many-to-Many Video Wall	√	√	√	√	√	√

MODELS	iSwitch 265	iSwitch 265K	iSwitch 265TR	iSwitch 2000	iSwitch 2000D	iSwitch SDV
KVM	√		√	√	√	√
PoE	√	√	√	√	√	√
Web GUI, RS232, IR	√	RS232	√	√	√	√
Loop Out (Encoder)	√		√	√	√	√
Audio Embedding & Extract	√	√	√	√	√	√
Signal Preview	√	√	√	√	√	√
USB	USB 1.1		USB 2.0	USB 1.1 and 2.0	USB 1.1 and 2.0	USB 1.1 and 2.0
Fiber Optical redundancy			√		√	√
Dante Audio					√	
Relay control					√	
Transceiver			√			
Zero-configuration		Work with any network swtich				

Audio Video Control

iControl J10

PTZ Joystick Controller

• Support network control, with an independent IP address.
• Support VISCA, VISCA over IP, ONVIF, Pelco-d, Pelco-P protocol.
• Realize the control of conference camera software, with central control function.
• Zoom control of the conference camera
• Support full-key backlight effect, which can be turned on / off independently.
• Support IE browser to add configuration front-end device parameters.

iControl J20

IP PTZ Camera Controller with Screen

• With a 3.49 inch preview screen
• Supports network IP and RS-232/RS-422/RS-485 serial connections.
• With a 2D/3D joystick for PTZ control.
• Multiple knobs for focus, aperture, zoom, white balance, backlight, exposure, presets recall, IRIS/Shutter, and R/B configuration.
• Supports max. 255pcs camera connections.
• Supports ONVIF, VISCA, or NDI auto scan connected cameras.
• Supports PoE (Power over Ethernet).
• Supports ONVIF, VISCA over IP (UDP or TCP), Sony VISCA, NDI, PELCO-D, PELCO-P.
• Supports Web GUI control

iControl K06-UK

6 Keys Control Keypad, UK version

NEW

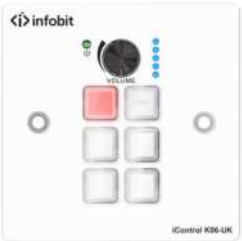

- 6x programmable backlit buttons with customizable label.
- Each button's color can be customized by the user.
- 1x volume control knob
- 2x RS-232, 2x IR and 2x Relay for control.
- Support TCP/IP Control
- Support IR learning function
- Can be controlled and configured via user-friendly Web GUI
- Can be powered by PoE
- UK Wallplate version

iControl K06-EU

6 Keys Control Keypad, EU version

NEW

- 6 Keys Control Keypad, US version
- 6x programmable backlit buttons with customizable label.
- Each button's color can be customized by the user.
- 1x volume control knob
- 2x RS-232, 2x IR and 2x Relay for control.
- Support TCP/IP Control
- Support IR learning function
- Can be controlled and configured via user-friendly Web GUI
- Can be powered by PoE
- EU Wallplate version

iControl K06-US

6 Keys Control Keypad, US version

NEW

- 6x programmable backlit buttons with customizable label.
- Each button's color can be customized by the user.
- 1x volume control knob
- 2x RS-232, 2x IR and 2x Relay for control.
- Support TCP/IP Control
- Support IR learning function
- Can be controlled and configured via user-friendly Web GUI
- Can be powered by PoE
- US Wallplate version

iControl KT069

6.9 Inch Control Touch Panel

NEW

- Support one RS-232 serial communication port, configuring 8 baud rates in the range of 2400-115200bps.
- Support access to the host system management web page with a password.
- Interface design and programming through IDE design tools.
- Compliant with industry standard network communication protocols (TCP/IP, HTTP, UDP, Websocket)
- With 1 Gigabit network port, the highest rate is up to 1G/bps.

MODELS	iControl K10-US	iControl K10-UK	iControl K10-TB
Version	US 1 Gang	UK 1 Gang	Table box version
RS232	√	√	√
TCP/IP	√	√	√
PoE	√	√	√
Web GUI	√	√	√
Cable raceway			√

Video Distribution

iTrans HC

4K60 HDMI to USB-C Converter

NEW

Converter 4K HDMI Input to USB-C Output
Support 18Gbps 4K60 HDMI video bandwidth
HDMI 2.0b, HDCP 2.2, and DVI 1.0 compliant
Video resolution up to 4K@60Hz 4:4:4
USB-C Output supports DP1.2 Alt-mode
Up to 7.1CH audio pass-through, supporting PCM, Dolby TrueHD, DTS-HD Master Audio
Compact in design, plug and play

iTrans NH1080

HDMI 1080P Full NDI Encoder/ Decoder

NEW

- Support FULL NDI, codec
- Encoder and Decoder all-in-one design.
- The encoder supports the HDMI loop-out
- Support PoE power supply
- Support PTZ camera control
- Support TALLY light display
- Support audio embedding and de-embedding
- Can be configured via the WEB GUI
- Support Multicast
- The HDMI input resolution is as 1080P/60,

iSwitch 201K

18Gbps HDMI+USB-C KVM Switcher KIT

- 18Gbps HDMI+USB-C KVM Switcher KIT
- HDMI 2.0, highest support 4K@60HZ 4:4:4, HDR10 and Dolby Vision, HDCP 2.2
- 1 x HDMI input, 1 x USB-B host, 1 x USB-C input, 1 x HDMI output and 1 x HDBaseT output
- HDBT 3.0, supports 100m transmission and bidirectional 48V PoC
- Support RS232 control and CEC control
- USB-C input supports 60W external charging
- Auto switch 5V or TMDS detection
- Support Dry Contact control

iSwitch 402MV

4K60 4x2 Presentation Switcher w/ Multiviewer and Seamless Switching

NEW

- HDMI 2.0b, HDCP 2.2 and HDCP 1.x compliant
- 18Gbps uncompressed bandwidth, input and output resolution up to 4K2K@60 4:4:4
- HDMI audio formats support LPCM, DD+, DTS, Dolby TrueHD, DTS HD-master pass-through
- Seamless switching between input channels
- Combined multiple images with independent layouts to display on two UHD TVs
- Up to 8 display modes: Single, PIP, PBP(1), PBP(2), Triple(1), Triple(2), Quad(1), Quad(2)
- Control via front panel buttons, IR remote, RS-232

iSwitch 401MV

4K60 4x1 Multiviewer Seamless Video Switcher

HOT

- 4K60 4x1 Multiviewer Seamless Video Switcher
- HDMI 2.0b, HDCP 2.2 and HDCP 1.x compliant
- Support 18Gbps video bandwidth
- Input and output resolutions up to 4K@60Hz
- Seamless switching on single-screen display mode
- Up to 8 display modes
- Audio de-embedding
- Front panel buttons, IR remote, RS-232 control

iSwitch 501HD

4K60 5x1 Presentation Switcher w/ HDMI and HDBaseT output, Dante

HOT

- Uncompressed 4K60 over HDBT 3.0 up to 132ft/40m
- Uncompressed 1080P&4K30 over HDBT 3.0 up to 70m
- Up to 5 display modes: Single/PIP/PBP/Triple/Quad
- 5x1 seamless switching (single screen) and fast switching (multiview)
- Input: 2x USB-C, 3x HDMI, 1x Analog audio, 1x Dante 2ch
- Output: 1x HDMI and 1x HDBT mirrored, 1x Analog audio, 1x Dante 2ch
- HDMI and HDBaseT (PoE) outputs (Mirrored)
- Dante 2x2 audio input and output

iSwitch 602

6x2 18G HDMI presentation switcher w/ matrix outputs

- HDMI V2.0 and HDCP 2.2 compliant.
- Video resolution up to 4K@60Hz 4:4:4, HDR.
- Supports auto switching.
- HDMI signals up to 40m at 4K and 70m at 1080p on HDBT output.
- USB-C input supports up to 4K@60Hz 4:2:0.
- Audio embedding and de-embedding.
- Supports audio output volume control.
- Supports downscaling on HDBT output and upscaling on HDMI output.
- RS232, IR, TCP/IP, CEC, and front panel control.

iSwitch S501

4K60 5x1 HDMI Presentation Switcher

- 4K60 5x1 HDMI Presentation Switcher
- HDCP 2.2/1.x and DVI 1.0 compliant
- Support 18Gbps video bandwidth
- HDR, HDR10, Dolby Vision and HLG are supported
- Video resolution up to 4K2K@50/60Hz YCbCr 4:4:4
- Support 3D video format
- Low power consumption
- Support IR remote control and panel button control
- Compact design for easy and flexible installation
- Ideal cost-effective solution for huddle space, small meeting room, home office, smart home...

iSwitch S301

4K60 3x1 HDMI Presentation Switcher

- 4K60 3x1 HDMI Presentation Switcher
- HDCP 2.2/1.x and DVI 1.0 compliant
- Support 18Gbps video bandwidth
- HDR, HDR10, Dolby Vision and HLG are supported
- Video resolution up to 4K2K@50/60Hz YCbCr 4:4:4
- Support 3D video format
- Low power consumption
- Support IR remote control and panel button control
- Compact design for easy and flexible installation
- Ideal for huddle space, small meeting room, home office, smart home...

iSwitch 402UC

4K60 4x2 UC Switcher with Dante

- 4K Video: resolutions up to 4K60Hz 4:4:4.
- 4×2 conference presentation switch, integrating video, audio, USB, control, and Ethernet.
- Dual USB-C and dual HDMI + USB Host inputs.
- Full-featured USB-C inputs, supports 4K video, USB 3.2 data, USB ethernet, and 60W charging.
- Supports automatic switching, USB and video independent switching, priority switching, and other switching methods.
- With 100m HDBT 3.0 output for video and USB extension...

iSwitch 201MV

4K60 2x1 Seamless Switcher with Multiviewer

NEW

- HDMI 2.0b, HDCP 2.2, and HDCP 1.x compliant
- Support 18Gbps video bandwidth
- Input and output resolutions support up to 4K2K@60 4:4:4
- Support LPCM, AC3, DD+, DTS, DTS-HD, up to 7.1 audio channel
- Seamless switching between input channels and combined multiple images on a single UHD monitor
- Up to 4 display modes: SINGLE, PIP, PBP (1), PBP (2)
- Audio de-embedding via analog and optical fiber audio ports
- Support volume control and independent audio selection
- Advanced EDID management

Video Distribution

Compare Models

MODELS	iSwitch S301	iSwitch S501	iSwitch 201K	iSwitch 401MV	iSwitch 402MV	iSwitch 402UC	iSwitch 501HD	iSwitch 602
Input	3x HDMI	5x HDMI	1x USB C; 1x HDMI	4x HDMI	4x HDMI	2x HDMI; 2x USB C	3x HDMI; 2x USB C; 1x USB B	4x HDMI; 1x VGA ; 1x USB C
Output	1x HDMI	1x HDMI	1x HDMI; 1x HDBaseT	1x HDMI	2x HDMI	2x HDMI	1x HDMI; 1x HDBaseT	1x HDMI; 1x HDBaseT
Resolution	4K60	4K60	4K60	4K60	4K60	4K60	4K60 4:4:4 In; 4K60 4:4:4 Out	4K60
Bandwidth	18Gbps	18Gbps	18Gbps	18Gbps	18Gbps	18Gbps	18Gbps	18Gbps
HDCP	HDCP 2.2/1.x	HDCP 2.2/1.x	HDCP 2.2	HDCP 2.2/1.x	HDCP 2.2/1.x	HDCP 2.2/1.x	HDCP 2.2/1.x	HDCP 2.2/1.x
USB Host			1x USB B			2x USB B, 2x USB C	2x USB C; 2x USB B	
USB Devices			2x USB 3.0 A; 3x USB 2.0 A; 1x USB 2.0 C			4x USB A 3.0	4x USB A	
Multiviewer				√	√		√	
Ethernet			√			√	√	
KVM			√			√	√	
Control	IR, Push button	IR, Push button	TCP/IP, RS232	IR, Push button, RS232	IR, Push button, RS232	Web GUI, Push button, RS232	Push button, Telnet, WebGUI, IR remote and RS-232	Telnet, WebGUI, IR remote and RS-232
Seamless Switching				√	√	√	√	
With HDBaseT			√			√	√	√
With Scaler	√	√	√	√	√	√	√	√
With Dante						√	√	

iSwitch 1601

16x1 HDMI Multi-viewer w/ Seamless Switching

- 16x1 HDMI Multi-viewer w/ Seamless Switching
- Compliant with HDMI 1.3a, HDCP 1.2
- Supports multiple HDMI 16-input and 1-output
- Supports up to 1080p High Definition resolution
- Support 16x1 Multi-viewer and seamless switching
- Support scaler up, scaler down function
- Support multi-output resolution
- Support digital audio format LPCM/AC3/DTS
- Support button, IR Remote, RS232

iSwitch 102

1x2 HDMI 18Gbps 4K60 Splitter

- 1x2 HDMI 18Gbps 4K60 Splitter
- HDMI 2.0b, HDCP 2.2 Compliant
- Up To 4K2K@60Hz With 24bit RGB/YCbCr 4:4:4
- VESA Format up To QSXGA@60Hz
- Supports LPCM 7.1CH, Dolby TrueHD, And DTS-HD Master Audio
- Built-In Equalizer, Retiming, And Driver
- Smart EDID, STD (1080p) And TV (Copy OUT1) Mode
- Compact Design For An Easy And Flexible Installation

iSwitch 108

1x8 HDMI 18Gbps 4K60 Splitter

- 1x8 HDMI 18Gbps Splitter
- HDMI 2.0b, HDCP 2.2 compliant
- Supports 18Gbps bandwidth
- Supports resolution up to 4K@60Hz 4:4:4
- Supports HDR function
- Supports COPY/AUTO EDID control via dialing the dip switch

iSwitch 104

1x4 HDMI 18Gbps 4K60 Splitter

- 1x4 HDMI 18Gbps 4K60 Splitter
- HDMI 2.0b, HDCP 2.2 compliant
- 4K2K@60Hz 8-bit RGB/YCbCr 4:4:4/YCBCR 4:2:2
- 3D frame sequential video format up to 1080p@60;
- Supports 3D frame sequential up to 4K2K@30Hz
- Supports high-resolution VESA mode video format up to QSXGA@60Hz
- Supports LPCM 7.1CH, Dolby TrueHD, and DTS-HD Master Audio
- Supports smart EDID control

iSwitch 1016

1x16 HDMI 18Gbps 4K60 Splitter

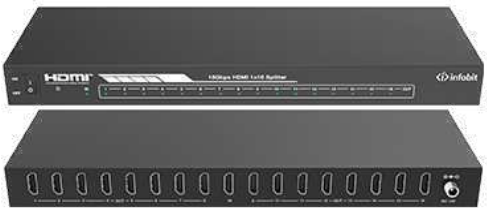

- 1x16 HDMI 18Gbps Splitter
- HDMI 2.0b, HDCP 2.2 / 1.x and DVI 1.0 compliant
- Support 18Gbps video bandwidth
- 4K2K@50/60Hz 4:4:4
- Support digital audio format: DTS-HD/Dolby-true-HD/LPCM 7.1/DTS/Dolby-AC3/DSD
- HDR, HDR10, HDR10+, HLG, and Dolby vision
- Advanced EDID management
- Compact design for easy and flexible installation

iSwitch 8K102

1x2 HDMI 8K Splitter w/ Audio

- 1x2 8K HDMI Splitter w/ audio de-embed
- HDMI 2.1, HDCP 2.3
- Support video resolution up to 8K@60Hz 4:2:0
- Support HDR, HDR10+, HLG, and Dolby vision
- Support up to 7.1CH HD audio pass-through
- Digital and analog audio de-embedded output
- Support 1 HDMI input, and 2 HDMI outputs.

iSwitch 8K108

1x8 HDMI 8K Splitter w/ Audio

- 1x8 8K HDMI Splitter w/ audio de-embed
- HDMI 2.1, HDCP 2.3
- Support video resolution up to 8K@60Hz 4:2:0
- Support HDR, HDR10+, HLG, and Dolby vision
- Support up to 7.1CH HD audio pass-through
- Digital and analog audio de-embedded output
- Support 1 HDMI input, and 8 HDMI outputs.

iSwitch 8K104

1x4 HDMI 8K Splitter w/ Audio

- 1x4 8K HDMI Splitter w/ audio de-embed
- HDMI 2.1, HDCP 2.3
- Support video resolution up to 8K@60Hz 4:2:0
- Support HDR, HDR10+, HLG, and Dolby vision
- Support up to 7.1CH HD audio pass-through
- Digital and analog audio de-embedded output
- Support 1 HDMI input, and 4 HDMI outputs.

iSwitch 104H150

1x4 HDMI 18Gbps Splitter w/ 150m HDBaseT

- 1x4 HDMI 18Gbps Splitter w/ 150m HDBaseT
- HDMI 2.0b, HDCP 2.2 and HDCP 1.x compliant
- Support video resolution up to 4K2K@60Hz 4:4:4
- Support up to 7.1CH HD audio pass-through
- Digital and analog audio de-embedded output
- 120m at 4K2K@60Hz, 150m at 1080P@60Hz
- Support 1 HDMI input, 1 HDMI loop output and 4 HDBaseT outputs.
- IR, RS-232 routed to HDBaseT output
- Advanced EDID management
- POC function (only from transmitter to receiver)

iSwitch 108H150

1x8 HDMI 18Gbps Splitter w/ 150m HDBaseT

- 1x8 HDMI 18Gbps Splitter w/ 150m HDBaseT
- HDMI 2.0b, HDCP 2.2 and HDCP 1.x compliant
- Support video resolution up to 4K2K@60Hz 4:4:4
- Support up to 7.1CH HD audio pass-through
- Digital and analog audio de-embedded output
- 120m at 4K2K@60Hz, 150m at 1080P@60Hz
- Support 1 HDMI input, 1 HDMI loop output and 8 HDBaseT outputs.
- IR, RS-232 routed to HDBaseT output
- Advanced EDID management
- POC function (only from transmitter to receiver)

Video Distribution

Compare Models

MODELS	iSwitch 102	iSwitch 104	iSwitch 108	iSwitch 8K102	iSwitch 8K104	iSwitch 8K108	iSwitch 1016	iSwitch 104H150	iSwitch 108H150
Splitter	1x2	1x4	1x8	1x2	1x4	1x8	1x16	1x4 with HDBaseT	1x8 with HDBaseT
Input	1x HDMI	1x HDMI	1x HDMI	1x HDMI	1x HDMI	1x HDMI	1x HDMI	1x HDMI	1x HDMI
Output	2x HDMI	4x HDMI	8x HDMI	2x HDMI	4x HDMI	8x HDMI	16x HDMI	4x HDBaseT out; 1x HDMI Loop out	8x HDBaseT out; 1x HDMI Loop out
Resolution	4K60	4K60	4K60	8K60	8K60	8K60	4K60	4K60	4K60
Bandwidth	18Gbps	18Gbps	18Gbps	48Gbps	48Gbps	48Gbps	18Gbps	18Gbps	18Gbps
HDCP	c	HDCP 2.2	HDCP 2.2	HDCP 2.3	HDCP 2.3	HDCP 2.3	HDCP 2.2	HDCP 2.2	HDCP 2.2
HDBaseT distance								120m 4K60; 150m 1080P	120m 4K60; 150m 1080P

iSwitch 265-Live

1080P H.264/H.265 AV Streamer

NEW

- 1080P60 H.264/265 HD Encoder
- Video resolution up to 1920×1200@60Hz 4:4:4
- Supports three streams: 1080P60Hz H265 + 540P@30 H264 +1280*720@5 JPEG
- Supports RTSP/UDP, RTSP/TCP, RTP/UDP, TS/UDP, RTMP/RTMPS stream standards
- Main stream output: 1080P60Hz
- Second stream output: 540P30Hz
- Supports unicast and multicast
- Supports audio-only stream and audio delay settings

Extenders & Connectivity

iTrans E70N

HDMI Extender (70M)

NEW

- HDCP 1.4 and DVI 1.0 compliant
- Support video resolution up to 4k2k@30Hz YUV 4:4:4, as specified in HDMI 1.4
- The maximum transmission distance via a single CAT6/5E cable is as follows:
- CAT6: 230ft/70m for 1080p, 131ft/40m for 4K30
- CAT5E: 197ft/60m for 1080p, 115ft/35m for 4K30
- Support copying EDID from the receiver display or looping out the display
- Allow for cascading via an additional HDMI loop-out port
- Support one-way POC functionality (from transmitter to receiver)
- One-way IR signal transmission
- Compact design for easy and flexible installation

iTrans B70S

HDMI 4K60 HDBaseT extenders

NEW

- HDMI 2.0b (18Gbps), HDCP 2.2 and DVI compliant
- Video resolutions up to 4K2K@50/60Hz (YUV444)
- 10bits HDR (High Dynamic Range) pass-through
- Supports HDMI High Bit Rate(HBR) audio pass-through
- POC (Power Over Cable) function is supported, either TX or RX is powered by a 24V@1A power supply, the other does not need power
- Transfer Bidirectional Infrared & RS232
- Transmission distance: 70 meters 1080P @60Hz; 40 meters 4K2K@50/60Hz (YUV444)

iTrans 201S

4K60 2x1 HDBaset Receiver w/ Scaler

HOT

- 1 HDMI input and 1 HDBaseT input.
- The HDMI output resolution can be selected from 720p to 4Kx2K @60Hz 4:4:4 to assure preferred output.
- HDMI signals transmission up to 70m at 4K and 100m at 1080p on HDBT input.
- Support various output resolutions, such as 4Kx2K@60Hz, 4Kx2K@30Hz, 1920x1080p@60Hz, 1280x720@60Hz and more.
- Supports RS232 pass-through
- Supports advanced built-in EDID management.

iTrans E100HC

HDMI 18Gbps HDMI/USB-C over HDBaseT 3.0 Extender (100m) with USB 2.0

NEW

- Up to 4K2K@60Hz (YUV 4:4:4) as specified in HDMI 2.0b
- 4K60/4K30/1080P signal up to 328ft/100m
- 1080P 8bit signal up to 492ft/150m
- TX features with 1x HDMI input, 1x USB-C input, 1x HDBT output, 1x USB 2.0 host and 3x USB 2.0 clients
- RX features with 1x HDMI output, 2x USB 2.0 clients
- USB-C and HDMI signal inputs support auto or manual switching mode
- USB-C supports DP-ALT mode for A/V, USB 2.0 data and power charging up to 60 watts
- 4K to 1080p downscaling features on HDMI output

iTrans E70C

HDMI HDBaseT Extenders, 70m

- HDMI 1.4, 10.2Gbps.
- HDCP 2.2, HDBaseT.
- 1080p 70m, 4K30Hz 4:4:4 40m.
- Bi-directional IR and RS232.
- Simple Power PoC (Power over Cable).
- The Tx and Rx can be used separately.

iTrans E70S

HDMI 4K to HDBaseT extenders Kit

HOT

- POC (Power Over Cable), either TX or RX is powered by 24V@1A
- Transmission distance:
- 70 meters: 1080P@60Hz36bit; 3D1080P@30Hz36bit;
- 40 meters: 1080P@60Hz@48bit; 1080P@120Hz@24bit; 3D1080P@60Hz@36bit; 4K2K@30Hz@24bit.
- Resolutions up to 4K x 2K@30Hz
- Bidirectional IR control signal
- Bidirectional RS232 control signal

iTrans E100UC

18G HDMI Extender over HDBaseT 3.0 with USB 2.0

HOT

- 18Gbps high bandwidth, HDMI V2.0.
- HDMI video up to 4K@60Hz 4:4:4, HDR10, Dolby Vision.
- Extends 4K or 1080p video signals up to 100 meters
- Bi-directional IR, USB and RS232 pass-through control and Ethernet extension.
- Supports bi-directional 24V PoC.
- Supports audio de-embedding and ARC
- Provides HDMI loop out on transmitter.
- Support Touch control, USB camera, Microphone, Speakerphone.

iTrans E90U8K

8K HDMI & USB over HDBaseT Extenders Kit

- HDMI 2.1, HDCP 2.3 and HDBaseT 3.0 compliant
- 40Gbps FRL and 18Gbps TMDS video bandwidth
- Video resolution is up to 8K@30 4:4:4 10bit, 4K@120Hz 4:4:4 10bit
- Up to 90m/295ft via a single CAT 6A/7 cable
- eARC/ARC from RX to TX sound system
- Support USB2.0 transmission (with speeds up to 350Mbps), Host/Device is configurable for VC applications
- Bi-directional Ethernet (1Gb), analog audio, IR & RS-232 signal pass-through

iTrans E100K

4K60 HDMI 100m Extender, 100m w/ KVM

- HDCP 2.2 / HDCP 1.4 and DVI 1.0 compliant
- Support 18Gbps video bandwidth
- Video resolution is up to 4k2k@60Hz YUV 4:4:4
- 328ft / 100 meters via a single CAT6a/7 cable
- Support ARC (Audio Return Channel) function
- Bi-directional IR, RS-232 and CEC pass-through
- Support USB KVM function
- HDR, HDR10+, Dolby Vision and HLG
- Supports PoC (Power over Cable) function
- Compact design for easy and flexible installation.
- * The Rx works with INFOBIT iTrans WP210-T

iTrans E100V3K

HDBaseT 3.0 Extender w/ eARC/ARC, 100m

- HDMI 2.0b, HDCP 2.2, and HDBaseT 3.0 compliant
- Uncompressed 4K@60Hz 4:4:4 up to 18Gbps video bandwidth
- Transmission distance up to 328ft/100 meters
- Supports eARC/ARC and SPDIF OUT
- Supports SPDIF audio reverse transmission
- Bi-directional IR, RS-232, and 1G Ethernet signal pass-through
- Supports USB2.0 transmission, Host/Device is configurable
- Bi-directional 24V POC function

iTrans E100TR

HDMI 4K60 HDBaseT Transceiver, 100m w/ USB 2.0

NEW

- HDMI 4K60 18Gbps HDBaseT Transceiver with USB 2.0
- HDMI 2.0b and HDCP 2.3 compliant
- Support 18Gbps video bandwidth
- Up to 4K2K@60Hz YUV 4:4:4
- 100m for 4K2K@60Hz 4:4:4
- Support bi-directional IR signal and USB KVM
- Support bi-directional POC (Power over Cable)
- For VC application: Touch control, USB camera, Microphone, Speakerphone
- Support USB 2.0 transmission
- EDID management
- HDBaseT 3.0

iTrans E100HCU

4K60 HDMI and USB C over HDBaseT 2.0 Extender, 100m

- Resolution up to 4K2K@60Hz 4:4:4.
- HDBaseT 2.0.
- Compliant with HDCP 2.3, 18Gbps video bandwidth.
- 4K60/4K30/1080P signal transmission distance up to 328ft/100m via a single CAT6A/7 cable (HDBT Standard Mode).
- 1080P 8bit signal transmission distance up to 492ft/150m via a single CAT6A/7 cable (HDBT Long Reach Mode).
- USB-C and HDMI signal inputs support auto or manual switching mode.

iTrans E100HC3K

4K60 HDMI and USB C Over HDBaseT 3.0 Extender

NEW

- HDCP 2.2 and DisplayPort 1.4a, 18Gbps video bandwidth
- HDBaseT 3.0 VS3000 chipset-based
- Video resolution up to 4K2K@60Hz 4:4:4
- 4K60/4K30/1080P signal transmission distance up to 100m
- 1080P 8-bit signal transmission distance up to 150m under HDBT Long Reach Mode
- TX features 1x HDMI™ input, 1x USB-C input, 1x HDMI™/HDBT output, 1x USB 3.2 host and 3x USB 3.2 clients
- Auto switching supports HDMI™ 5V or signal detect selection

iTrans E150CG

HDMI HDBaseT Extenders, 150m w/ Audio extract

HOT

- HDMI 2.0, 18Gbps.
- HDCP 2.2, HDR, HDBaseT.
- 1080p 150m, 4K/60Hz 120m.
- Bi-directional IR and RS232.
- Simple Power PoC (Power over Cable).
- The Tx and Rx must be used in pairs.

iTrans E150U2

HDMI 4K60 HDBaseT Extender, 150m w/ USB 2.0

- HDMI 4K60 18Gbps HDBaseT Extender with USB 2.0
- HDMI 2.0b and HDCP 2.2 compliant
- Support 18Gbps video bandwidth
- Up to 4K2K@60Hz YUV 4:4:4
- 150m for 1080P@60Hz, 120m for 4K2K@60Hz 4:4:4
- Support bi-directional IR signal and USB KVM
- Support bi-directional POC (Power over Cable)
- For VC application: Touch control, USB camera, Microphone, Speakerphone
- Support USB 2.0 transmission
- EDID management

iTrans E150SK

HDMI HDBaseT Extenders, 150m w/ KVM

- HDMI2.0b, HDCP 2.2 and USB 1.1 compliant
- Support 18Gbps video bandwidth
- Video resolution up to 4K2K@60Hz YUV 4:4:4
- 492ft / 150m at the resolution of 1080P@60Hz, or 394ft / 120m at 4K2K@60Hz 4:4:4 via a single CAT6 cable
- Support bi-directional IR signal and USB KVM signal pass-through
- Support bi-directional POC (Power over Cable)
- Compact design for easy and flexible installation
- The Tx and Rx must be used in pairs.

iTrans E150CL

HDMI HDBaseT Extenders, 150m w/ Loopout

- HDMI 1.4, 10.2Gbps.
- HDCP 1.4, HDBaseT.
- 1080p 150m.
- Bi-directional IR and RS232.
- Simple Power PoC (Power over Cable).
- The Tx and Rx must be used in pairs.

Extenders and Connectivity

Compare Models

Models	E90U8K	E100V3K	E100K	E100HC	E100UC	E100TR
Distance-1080P	90m	100m	100m	100m	100m	100m
Distance-4K60	90m	100m	100m	100m	100m	100m
Distance- 8K	90m					
Must be used in pair	Yes	Work separately	Work separately	Yes	Yes	Yes
Loopout	√	√			√	
De-embeded audio	√	√	√	√	√	√
HDR	√	√	√	√	√	√
HDMI	HDMI 2.1, 40Gbps	HDMI 2.0b, 18Gbps	HDMI 2.0b, 18Gbps	v	HDMI 2.0b, 18Gbps	HDMI 2.0b, 18Gbps
PoC (Power over Cable)	√	√	√	√	√	√
Bi-directional IR and RS232	√	√	√	√	√	√
Works with WP210-T		√	√			
KVM	√	√	√	√	√	√
USB 2.0 for VC devices	√	√		√	√	√
ARC/ eARC	√	√		√	√	√
Works with iTrans 201S	√			√	√	√
With USB C IN				√		c

Extenders and Connectivity

Compare Models

MODELS	E70N	E70C	E70S	B70S
Distance- 1080P	70m	70m	70m	70m
Distance- 4K	40m	40m	40m	40m
Resolution	4K30	4K30	4K30	4K60
Must be used in pair	√	Work separately	Work separately	Work separately
HDMI	HDMI 1.4, 10.2Gbps	HDMI 1.4, 10.2Gbps	HDMI 1.4, 10.2Gbps	HDMI 2.0, 18Gbps
PoC (Power over Cable)	√	√	√	√
Bi-directional IR and RS232	One-way IR	√	√	√
Works with iTrans 201S			√	√
Power	12V	12V	24V	24V

MODELS	E150CL	E150CG	E150SK	E150U2
Distance- 1080P	150m	150m	150m	150m
Distance- 4K60		120m	120m	120m
Distance- 8K				
Must be used in pair	Yes	Yes	Yes	Yes
Loopout	√	√		
De-embeded audio		√		
HDR		√	√	√
HDMI	HDMI 1.4, 10.2Gbps	HDMI 2.0b, 18Gbps	HDMI 2.0b, 18Gbps	HDMI 2.0b, 18Gbps
PoC (Power over Cable)	√	√	√	√
Bi-directional IR and RS232	√	√	√ (IR only)	√ (IR only)
Works with WP210-T				
KVM			√	√
USB 2.0 for VC devices				√

iTrans WP

Modular Multimedia Wall Plate

NEW

- Modular Design.
- Integrate Ethernet, USB data, audio, and video.
- Ideal for applications like healthcare, education, enterprise, and government buildings.
- Supports HDMI, USB A 3.0, USB B 2.0, USB C full-featured, and RJ45 modulars.
- UK 2-Gang version
- Project on-site configurable.

iTrans WP70-T

HDMI to HDBaseT Wall Plate Transmitter

- HDMI 2.0, 18Gbps.
- HDCP 2.2, HDR, HDBaseT.
- 1080p 70m, 4K/60Hz 40m.
- Bi-directional IR and RS232.
- Simple Power PoC (Power over Cable).

iTrans WP70B

4K60 HDBaseT Wallplate Extender Kit with USB B/ USB C/ HDMI, 70m

NEW

- Video resolution up to 4K@60Hz 4:4:4
- Compliant with HDMI 2.0b, HDCP 2.2, and DisplayPort 1.2a
- Supports 18Gbps video bandwidth
- Support HDMI and USB-C input
- Distance up to 230ft / 70m for 1080P or 131ft / 40m for 4K via a single CAT6/6a/7 cable
- Support HDR10 and HDR10+
- Input signal selection supports automatic mode and manual mode
- USB2.0 extension with Receiver

iTrans WP70C

4K60 HDBaseT Wallplate Extender Kit with USB C and HDMI, 70m

NEW

- Video resolution up to 4K2K@50/60Hz 4:4:4
- Compliant with HDMI 2.0b, HDCP 2.2, and Display Port 1.2a
- HDMI input supports 18Gbps video bandwidth;
- USB-C input supports 5.4Gbps video bandwidth
- Distance up to 230ft / 70m for 1080P@60 or 131ft / 40m for 4K@60 via a single CAT6/6a/7 cable
- Support 3D, HDR10 and Dolby Vision
- Support HDMI and USB-C input
- With USB-C charging port
- US 1-Gang version

iTrans WP70HBC

4K60 HDBaseT Wallplate Extender Kit with USB B/ USB C/ HDMI, 70m

NEW

- HDMI 2.0 input supports video resolutions up to 4K@60Hz 4:4:4 8bit and HDCP 2.2.
- Supports transmission of 4K@60Hz 4:4:4 8bit signal up to 40m/131ft and of 4K@30Hz 4:4:4 8bit signal up to 70m/230ft via a Cat 6A or above cable.
- An additional analog pass-through channel allows for independent audio distribution to the HDBT receiver.
- High-speed USB 2.0 pass-through with data rate up to 300Mbps.
- The RS232 port supports command pass-through, API control and firmware update.

iTrans WP100HC

4K60 HDMI/USB-C 2x1 HDBT Wall-plate Extender (UK Version)

NEW

Support video resolution up to 4K2K@60Hz (4:4:4)
HDMI 2.0b, HDCP 2.2/1.x, and DP 1.2a compliant
HDMI input supports 18Gbps video bandwidth
Up to 7.1 channels of HD audio
Input signal source selection supports button switching
HBT mode: Audio and video signals can be transmitted up to 100m for 4K60/4K30/1080P
LRM mode: Audio and video signals can be transmitted up to 150m for 4K30/1080P

iTrans WP301-Kit

HDBaseT Wall Plate Transceiver Kit

- Supports HDMI signal up to 4K@60Hz 4:4:4, USB-C signal up to 4K@30Hz 4:4:4.
- Supports HDMI V2.0 standard and HDCP 2.2
- Active input automatic detective.
- 4K@60Hz up to 131ft/40m and 1080p@60Hz up to 70m.
- The USB-C supports video and USB data
- Supports RS232 control
- Supports bidirectional IR pass-through
- Supports CEC
- Supports bi-directional 24V PoC
- Supports USB 2.0 KVM solutions

iTrans WP210-T

HDBaseT Wall Plate Transmitter

- HDMI 2.0, 18Gbps.
- HDCP 2.2, HDR, HDBaseT.
- 1080p 70m, 4K/60Hz 40m.
- Bi-directional IR and RS232.
- Simple Power PoC (Power over Cable).
- 1080p/60Hz VGA, with scaling.

iTrans WP200-Kit

HDBaseT Wall Plate Transceiver Kit

- HDMI 1.4, 10.2Gbps.
- HDCP 2.2, HDR, HDBaseT.
- 1080p 70m, 4K/30Hz 40m.
- Bi-directional IR and RS232.
- Simple Power PoC (Power over Cable).
- Web GUI.
- 1080p/60Hz VGA, with scaling.
- Supports whiteboard touch.

iTrans UC-F300

4K60 USB-C Over Fiber Extender

NEW

- Compliant with USB Type-C DisplayPort Alternative Mode
- Video resolution is up to 4K2K@50/60Hz 4:4:4
- Compliant with HDCP2.2/2.3 and 1.x
- Support HBR3, HBR2, HBR and RBR (8.1/5.4/2.7/1.62Gbps)
- Support any VESA standard resolution transmission
- HDR10, HDR10+, Dolby Vision, HLG pass-through
- Support LPCM 7.1CH, Dolby 5.1, Dolby TrueHD, Dolby Atmos and DTS-HD Master, DTS:X Audio
- Transmission distance is up to 10km over a single-mode fiber cable

iTrans DH-F300

DP/HDMI 4K60 Fiber Extender

NEW

- DisplayPort/HDMI™ combo connector (HDDP) supports both DisplayPort and HDMI™ video interfaces
- Compliant with HDCP 2.3, DisplayPort 1.4 ALT Mode
- Video bandwidth 8.1/5.4/2.7/1.62Gbps (DP) and 18Gbps (HDMI™)
- Video resolution is up to 4K@60
- Support any VESA standard resolution transmission
- Automatic recognition of DP/HDMI™ on input and output ports

iTrans F1000

HDMI 4K60 Optical Fiber Extender with Audio Extracting

- HDMI 4K60 Optical Fiber Extender with Audio Extracting
- HDMI 2.0b, HDCP 2.2 and DVI 1.0 compliant
- Support 18Gbps video bandwidth
- Video resolution up to 4k2k@50/60Hz 4:4:4
- 3D and HDR format video, without CEC control
- Up to 10km over single-mode fiber or 330m over multimode fiber
- Support bi-directional IR control, RS-232 pass-through and EDID management for simple and convenient control
- Transmitter supports loop output (sharing local HD video and audio) and audio embedding function
- The receiver supports audio extracting

iTrans W100

100m HDMI FHD Wireless Extender with One-way IR

- 100m HDMI FHD Wireless Extender with One-way IR
- HDMI 1.3, HDCP 1.4 and DVI 1.0 compliant
- Transmit one HDMI HD source signal to one HDMI HD display via wireless
- With one-way IR control
- Up to 1920×1080@60Hz YCbCr 4:4:4
- Wireless transmission distance up to 330ft/100m. (In an open environment without Wi-Fi interference.)
- H.265 High-performance codec technology
- End-to-end delay is less than 120ms
- Compact design for easy and flexible installation

iTrans USB2-TR50

50m USB 2.0 Extenders Kit w/ KVM

- High-Speed USB 2.0 compliant, 480Mbps.
- Up to 50m over a CAT5e/6/7 cable.
- Equipped with 4 USB peripherals to connect with keyboards, mouse, cameras, microphones and more.
- The first two USB-A ports provide 5V1A each and the other two output 5V500mA each.
- Compatible with Windows, macOS, and Linux.
- Plug and play.

iTrans USB2-TR100

100m USB 2.0 Extender Kit w/ KVM

- Supports USB 2.0 protocol, 480Mbps
- Up to 100 meters / 328ft via CAT 5e/6 cable
- Supports one USB-B port input in the transmitter
- Supports two USB 2.0 ports output in the receiver
- Equipped with 2 USB peripherals to connect with keyboards, mouse, cameras, microphone and more.
- Supports the PoC function, which means that either transmitter or receiver is connected powered supply by a 12V/1A power adapter
- Plug and play

iTrans USB2-TR80

USB 2.0 Extender, 80m, RS232

- Up to 80m over a CAT5e/6/7 cable
- Equipped with 4 USB peripherals to connect with keyboards, mouse, cameras, microphones and more.
- With RS232
- Support PoC, 12V2A power supply
- Works with all brands of USB cameras, microphones, speakerphones
- Supports KVM

iTrans USB3-TR100

USB 3.0 over HDBaseT 3.0 extender, 100m

HOT

- Extension of USB 3.0 up to 100m over CAT6a cable
- USB 3.0 connectivity with data transfer rate up to 5Gbps
- Backwards compatible with USB 2.0 and 1.1
- USB-A 1/2 support 5V/1.5A, 3/4 support 5V/1A
- Support RS-232 pass-through and FSYNC GPIO pass-through (for industry camera use)
- Support bi-directional 24V PoC
- Plug and play, no driver and setting installation required
- Compatible with INFOBIT, Logitech, Poly, Jabra and more brands of cameras, microphones, speakerphones, etc.

iTrans U3-WP100TR

USB 3.2 Gen 1 Wallplate Extender 100m (US 1-Gang)

NEW

US 1-Gang wall plate
Extension of USB 3.2 Gen 1 up to 100m/328ft over CAT6a cable
USB 3.2 Gen 1 connectivity with data transfer rate up to 5Gbps
Backwards compatible with USB 2.0 and 1.1
Hardware acceleration for isochronous and bulk transfer
TX features 1x USB-B and 1x USB-C selectable host ports
Supports auto-switching and manual-switching modes
Supports RS-232 pass-through and API control
Supports firmware upgrade via USB-C service port

iTrans U3-TR100CB

USB 3.2 Gen 1 Extender with USB C and USB B (100m)

NEW

• Extension of USB 3.2 Gen 1 up to 100m/328ft via CAT6a cable
• USB 3.2 Gen 1 connectivity with data transfer rate up to 5Gbps
• Backwards compatible with USB 2.0 and 1.1
• Hardware acceleration for isochronous and bulk transfer
• TX features 1x USB-B and 1x USB-C selectable host ports
• Support auto-switching and manual-switching modes
• RX features 1x USB-C and 3x USB-A output ports (2x 5V@1A and 2x 5V@1.5A)

MODELS	iTrans USB2-TR50	iTrans USB2-TR80	iTrans USB2-TR100	iTrans USB3-TR100
Type	Tx & Rx kit, Cat cable	Tx & Rx kit, Cat cable	Tx & Rx kit, Cat cable	Tx & Rx kit, Cat cable
Host	USB 2.0 B, 1pcs	USB 2.0 B, 1pcs	USB 2.0 B, 1pcs	USB 3.0 B, 1pcs
USB A	4x USB 2.0 A female, 480Mbps	4x USB 2.0 A female, 480Mbps	2x USB 2.0 A female, 480Mbps	4x USB 3.0 A female, 5Gbps
RS232		1x RS232		1x RS232
Distance	50 meters	80 meters	100 meters	100 meters

iTrans USB32-S (new)

USB 3.2 10G Switcher 2x1 with Auto Switching

HOT

- 2x1 USB 3.2 switcher, 10G
- Supports auto-switching
- Sufficient power(2A) for latest camera
- Support button, RS232 and GPIO control
- Share VC devices like camera, microphone, speakerphone, touch, keyboard, mouse, printer, and USB storage between BYOD/BYOM PC and Room PC (or interactive OPS)

iTrans EA300

Audio Extender over CAT Cable (300m)

• Extend optical and coaxial digital audio signals up to 300m(48kHz), 150m (96kHz) or 100m (192kHZ) over a single CAT cable
• Optical and coaxial digital signals can be distributed at the same time
• Built-in DAC (Digital to Analog Converter) converts either optical or coaxial
• Support sample rates 32 kHz, 44.1 kHz, 48 kHz, 96 kHz and 192 kHz up to 24-bit resolution
• Support LPCM, DTS, Dolby Digital and Dolby Digital Plus.
• Support one-way POC function.
• Plug-and-play

iTrans EM

18Gbps HDMI Manager with EDID & HDCP Manager

HOT

- 18G HDMI 2.0 4K@60 444 HDCP2.2.
- Supports EDID & HDCP manager.
- Power by HDMI or USB-C.
- CEC block switch.

Trans OCS 151

One Cable Station 15 in 1 w/ DisplayLink

- Single DP port: 5K/60Hz
- Dual 4K/60Hz: HDMI + HDMI, DP + DP, or HDMI + DP
- USB 3.1 Gen 2, 10Gbps backward compatible
- 10/100/1,000 Mbps Network
- Support SD/TF card reader, max support 2TB
- Support 3.5 audio ports, 4 headphones and 3 audio/microphone separation audio
- Support RJ45 link, 1,000/100/10Mbps
- DC24V power supply, 60W PD
- Support DisplayLink

iTrans OCS 181

One Cable Station 18 in 1, without DisplayLink

- USB3.0 (5Gbps) high-speed data transmission
- Type C port extends 2 HDMI ports, 1 DP port, 1 RJ45 1,000Mbps, 2 USB 2.0, 3 USB 3.0, 3 USB C, 1 4-section audio port and 1 set of audio/ microphone seperation port
- Support SD/TF card reader, max support 2TB
- Support 3.5 audio ports, 4 headphones and 3 audio/microphone separation audio
- Support RJ45 link, 1,000/100/10Mbps
- DC24V power supply, 60W PD

iBox TW

INFOBIT Table Box w/ Wireless charging

HOT

- Multi connectivity ports
- Damping Lid
- Stylish and discreet design
- Sandblasted anodized aluminum top finish
- Wireless charger for smartphones
- Universal power socket is compatible with all sorts of power plugs
- Easy to install and terminate
- Wireless charger top, 1 universal power socket, 1 charging USB, 1 HDMI, 1 3.5mm, 2 RJ45

iBox TPD

INFOBIT Table Box w/ Pop-up lid w/ Dual power

- Multi connectivity ports
- Damping retractable lid
- Stylish and discreet design
- Sandblasted anodized aluminum top finish
- Universal power socket is compatible with all sorts of power plugs
- Easy to install and terminate
- 2 Universal power sockets, 1x VGA+3.5mm audio, 1x USB A power, 1x HDMI

iBox TPC

INFOBIT Table Box w/ Pop-up lid w/ Type C charging

HOT

- Multi connectivity ports
- Pneumatic Lift Pop-up Lid
- Stylish and discreet design
- Sandblasted anodized aluminum top finish
- Universal power socket is compatible with all sorts of power plugs
- Easy to install and terminate
- 1x Universal Power, 1x USB A charging, 1x USB C charging, 1x RJ45 cable, 1x HDMI cable

iBox TP

INFOBIT Table Box w/ Pop-up lid

- Multi connectivity ports
- Pneumatic Lift Pop-up Lid
- Stylish and discreet design
- Sandblasted anodized aluminum top finish
- Universal power socket is compatible with all sorts of power plugs
- Easy to install and terminate
- 1 Universal power socket, 1 charging USB, 1 HDMI, 1 3.5mm, 2 RJ45

iBox TPV

INFOBIT Table Box w/ Pop-up lid w/ VGA

- Multi connectivity ports
- Pneumatic Lift Pop-up Lid
- Stylish and discreet design
- Sandblasted anodized aluminum top finish
- Universal power socket is compatible with all sorts of power plugs
- Easy to install and terminate
- 1 Universal power socket, 1 charging USB, 1 HDMI, 1 3.5mm, 1 RJ45, 1 VGA

iBox 01

Table mount box for iShare+

- 2x HDMI 2.0, 3x USB A, 1x USB Type C, 1x RJ45, 1x VGA+Audio, 1x Power Plug.
- Compatible with iShare Plus.
- With Tilt-Up Lid

iBox Core-500

Retractable In-Desk Table Box with USB C, HDMI and USB A

NEW

- Provides quick and easy access to AV cables.
- Ideal for conference tables, lecterns, or other meeting spaces.
- Features a sleek insert design that blends seamlessly with any décor.
- Easily installs into a table or other surface up to 75mm (2.95").
- Recommended table opening size: 80mm (3.15").
- Includes an under-table bag to conceal cables, ensuring a clean and tidy installation.
- 1x HDMI 4K60 cable, 1x 5Gbps USB A to B cable, and 1x USB4 C to C cable.

iBox Flex

Modular Table Box w/ Retractable System

NEW

• iBox Flex includes:
(2) Universal power sockets
(1) 1-meter retractable HDMI cable
(1) 1-meter retractable RJ45 cable
(1) 1-meter retractable USB A cable (USB 2.0 data and charging)
(1) 1-meter retractable USB C cable (USB 3.2 supports AV, 4K60Hz, 100W PD)

• Features
Modular design
A combination of any 4 retractable modules
Pull-and-stop or pull-and-retract.
Easy to install
Maximum 1m cable extension

Extenders and Connectivity

Compare Models

MODELS	iBox TW	iBox TP	iBox TPV	iBox TPC	iBox TPD	iBox 01	iBox Flex
Power Socket	1 Universal	1 Universal	1 Universal	1 Universal	2 Universal	1 Universal	2 Universal
HDMI	1	1	1	1	1	2	1
VGA			1		1	1	
3.5mm	1	1	1		1	1	
DP							
USB A	1	1	1	1	1	3	1
USB C				1		1	1
Charging	Wireless Charging						
RJ45	2	2	1		1	1	1
Pass-through Cable				1x RJ45; 1x HDMI			
Retractable Cable							1x RJ45; 1x HDMI; 1x USB A; 1x USB C
Shape	Round	Round	Round	Round	Rectangle	Rectangle	Rectangle
Modular							Yes

KVM Solutions

iSwitch 201HK

4K60 2x1 KVM Switcher

NEW

- HDCP 2.3 compliant
- Support Ultra-wide Screen, resolution up to 4K@60Hz, 2K@60Hz/144Hz as specified in HDMI 2.0
- HDR, HDR10, HDR10+, Dolby Vision, HLG pass-through
- Using only 1 set of keyboard, mouse, and monitor to control 2 computers
- Support video fast switching and keyboard/mouse seamless switching
- Switching via front panel buttons, keyboard/mouse hotkeys, IR remote control, and RS-232 commands
- The integrated USB 3.0 ports allow you to share USB peripherals like printers, scanners, webcams, and hard disks with data transfer rates up to 5Gbp/s

iSwitch 401MVK

4K60 4x1 KVM Switcher with Multiviewer

NEW

- HDCP 2.2 and HDCP 1.x compliant
- Input and output resolutions up to 4K2K@60Hz 4:4:4, as specified in HDMI 2.0b
- Up to 8 display modes: Single, PIP, PBP (1), PBP (2), Triple (1), Triple (2), Quad (1), Quad (2)
- Seamless switching in single-screen display mode
- Fast switching in multiview display mode
- Using only 1 set of keyboard, mouse, and monitor to control 4 computers
- Built-in 3-port USB 3.1 Gen 1 hub with SuperSpeed 5Gbps data transfer rates, allowing you to share USB peripherals like printers, scanners, webcams and hard disk between computers

iSwitch 401HK

4K60 4x1 KVM Switcher

NEW

- Resolution up to 4K@60Hz, 2K@60Hz/144Hz as specified in HDMI 2.1
- Using only 1 set of keyboard, mouse, and monitor to control 4 computers
- Support video fast switching, and keyboard/mouse seamless switching
- Switching via front panel buttons, keyboard/mouse hotkeys, IR remote control, and RS-232 commands
- Support auto-switching
- The integrated USB 3.0 ports allow you to share USB peripherals like printer, scanner, webcam, and hard disk with data transfer rates up to 5Gbp/s

iSwitch 402KVM

4K60 4x2 Multiviewer with KVM

NEW

- 4xHDMI 2.0 inputs, 2xHDMI 2.0 outputs,1xHDMI 2.0 loop out, all up to 4K@60Hz 4:4:4.
- Display and control 4 input sources with only one mouse and keyboard set.
- Play-and-Play, no need for control software
- Adjust the input window size and switch signals by mouse and keyboard.
- The position and size of the 4 input windows can be adjusted arbitrarily.
- Multiple display layouts include quad-view, triple-view, dual-view, and full view.
- Each video window supports free overlay, resize, move and overlap.

iSwitch 201HKL

4K60 2x1 KVM Switcher Lite

EW

- 4K60 2×1 KVM Switcher
- Using only 1 set of keyboard, mouse, and monitor to control 2 computer devices
- Support hot key commands and mouse gestures to switch inputs
- Support front panel buttons, RS232, keyboard hot keys to control the KVM switch.
- Available to use the keyboard without any delay after switching input sources
- Support resolution up to 3840*2160@60Hz 4:4:4
- Compliant with HDCP 2.2, HDMI 2.0
- Support USB 2.0 for printers, USB drive, web cam, USB microphone/ speaker etc

iSwitch 801HKL

4K60 8x1 KVM Switcher Lite

NEW

- 4K60 8×1 KVM Switcher
- Using only 1 set of keyboard, mouse, and monitor to control 8 computer devices
- Support hot key commands and mouse gestures to switch inputs
- Support front panel buttons, RS232, keyboard hot keys to controlthe KVM switch.
- Available to use the keyboard without any delay after switching input sources
- Support resolution up to 3840*2160@60Hz 4:4:4
- Compliant with and HDCP 2.2, HDMI 2.0
- Support USB 2.0 for printers, USB drive, web cam, USB microphone/ speaker, etc

iSwitch 401HKL

4K60 4x1 KVM Switcher Lite

NEW

- 4K60 4×1 KVM Switcher Lite
- Using only 1 set of keyboard, mouse, and monitor to control 4 computer devices
- Support hot key commands and mouse gestures to switch inputs
- Support front panel buttons, RS232, keyboard hot keys to control the KVM switch.
- Available to use the keyboard without any delay after switching input sources
- Support resolution up to 3840*2160@60Hz 4:4:4
- Compliant with HDCP 2.2, HDMI 2.0

iSwitch U44KM

USB 4-Port Roaming Mouse Switcher

NEW

- USB 4-Port Roaming Mouse Switcher
- USB 1.1 compliant
- 4x USB 1.1 keyboard and mouse ports, 4x USB 1.1 PC ports (HOST)
- Support Mouse Slide Screen Function. In different modes, one set of keyboard and mouse can move left and right or up and down among four computer monitors, and the user can select one host to operate.
- Support three mode switch methods: mode switch button, keyboard hotkeys and Web GUI (User can define the placement mode in the User-defined Mode).
- Support USB power supply

Simple to install, plug and play

iSwitch V1801

1-Port 18.5" LCD KVM Console

NEW

- 1x VGA port
- 18.5-inch LCD monitor and KVM control, 1U size
- 1920x1080 FHD, 16:9 aspect ratio LCD screen.
- The screen can be unfolded up to 110 degrees
- OSD touch buttons eliminate the need for panel openings, improving product protection.
- Independent "KVM-OSD" button supports one-click access to the KVM OSD menu.
- Auto-off backlight LCD monitor saves energy.
- Easy unlocking, and drag out to use the KVM console directly by just one-hand operation.

iSwitch V1816

16-Port 18.5" LCD KVM Console

NEW

- 16x VGA ports
- 18.5-inch LCD monitor and KVM control, 1U size
- 1920x1080 FHD, 16:9 aspect ratio LCD screen.
- The screen can be unfolded up to 110 degrees
- OSD touch buttons eliminate the need for panel openings, improving product protection.
- Independent "KVM-OSD" button supports one-click access to the KVM OSD menu.
- Auto-off backlight LCD monitor saves energy.
- Easy unlocking, and drag out to use the KVM console directly by just one-hand operation.

iSwitch V1808

8-Port 18.5" LCD KVM Console

NEW

- 8x VGA ports
- 18.5-inch LCD monitor and KVM control, 1U size
- 1920x1080 FHD, 16:9 aspect ratio LCD screen.
- The screen can be unfolded up to 110 degrees
- OSD touch buttons eliminate the need for panel openings, improving product protection.
- The independent "KVM-OSD" button supports one-click access to the KVM OSD menu.
- Auto-off backlight LCD monitor saves energy.
- Easy unlocking, and dragout to use the KVM console directly by just one-hand operation.

MODELS	iSwitch 201HK	iSwitch 401HK	iSwitch 401MVK
Host Video IN	2x HDMI	4x HDMI	4x HDMI
Host USB IN	2x USB 3.0 B	4x USB 3.0 B	4x USB 3.0 B
Devices USB	4x USB 3.0 A	4x USB 3.0 A	3x USB 3.0 A
Video OUT	1x HDMI	1x HDMI	1x HDMI
Audio OUT	1x 3.5mm	1x 3.5mm	1x L/R, 1x Optical
Control	RS232, IR, Button	RS232, IR, Button	RS232, IR, Button
Hotkey	Yes	Yes	Yes
Multiviewer	No	No	Yes

UC Hub

iTrans UC-Hub21

4K60 18Gbps HDMI/USB-C 2x1 UC Hub with KVM

HOT

- 4K60 18Gbps HDMI/USB-C 2x1 UC Hub with KVM
- HDMI 2.0, HDCP 2.2 / 1.x, DVI 1.0 and DP1.2
- Video resolution up to 4K2K@60Hz 4:4:4
- Support HDR, HDR10, HDR10+, Dolby Vision HLG pass-through
- Support HDMI audio pass-through up to 7.1CH HD
- Support HDMI/USB-C (AV) inputs and 1*HDMI+ 4*USB (2* USB2.0+ 2*USB1.1) outputs
- Support input auto switching
- Adaptive EDID
- Control via front panel button/hot-key/mouse

iTrans UC-HUB2U

Dual USB and HDMI Cameras Mixer Hub

NEW

- Supports 3 camera sources connection, 1x USB 3.0, 1x USB 2.0, 1x HDMI 1.4
- Seamless switching between 3 input sources.
- Mix videos from 3 input sources.
- Mixed layout can be defined in the Web GUI, such as picture in picture, side by side, big and small.
- 1x HDMI 2.0 output for local monitor, 1x USB-C (UVC/UAC) output for PC.
- Enable mute video/audio to video conferencing or live broadcasting.
- Controllable by LAN & RS-232.
- PoE supported, saving additional PSU.

iTrans UC-Hub

USB-C UC/KVM Extender over HDBaseT 3.0

- USB-C UC/KVM Extender over HDBaseT 3.0
- USB-C input supports 4K@60Hz 4:4:4.
- 40m at 4K@60Hz and 70m at 4K@30Hz.
- Supports bidirectional 24V PoC power supply.
- TX supports USB-C charging
- 5x USB 2.0 ports for connecting with UC/KVM devices, such as camera, microphone, speakerphone, USB storage, keyboard, and mouse.
- Micro-USB for firmware upgrade.

MODELS	iTrans UC-Hub	iTrans UC-Hub21	iTrans UC-HUB2U
Host 1	1x USB C IN, 1x USB C charge	1x HDMI, 1x USB 3.0 B	1x USB C
Host 2	NO	1x USB C IN, 1x USB C charge	NO
Devices USB	3x USB 3.0, 1x USB C	4x USB 3.0	1x USB A 2.0, 1x USB A 3.0
Video OUT	Tx: 1x HDBaseT; Rx: 1x HDMI Out	1x HDMI	1x USB C, 1x HDMI OUT
Audio OUT	NO	1x 3.5mm	1x 3.5mm, 1x Phoneix
Control	NO	RS232, IR, Button	RS232, Web GUI, Buttons
Hotkey	NO	Yes	NO

Digital Conference

iMeeting X

Digital Conference Solution

NEW

• 19-inch controller, with a 4.3" touch screen.
• Supports both wired and wireless 2.4G and 5G connections.
• Built-in DSP digital audio processing module, support Adaptive Feedback Suppression (AFC), Environmental Noise Cancellation (AEC), digital equalizer (EQ), and automatic gain control (AGC).
• Support multiple conference modes: quantity limit, first-in first-out, speech application, voice control mode, etc.
• Built-in camera tracking function, supporting PELCO-D/P, SONY and other control protocols.
• With 8-in and 4-out video matrix.
• Built-in electronic voting function, with data management functions such as sign-in, voting, election, response, and scoring.
• Multiple types of microphones option.

iMeeting X-Mic-DC

Pure Discussion, without screen, Chairman

NEW

- Square Stem
- Pure Discussion
- Without Screen
- Chairman Unit

iMeeting X-Mic-DD

Pure Discussion, without screen, Delegate

NEW

- Square Stem
- Pure Discussion
- Without Screen
- Delegate Unit

iMeeting X-Mic-VC

Voting, with screen, Chairman

NEW

- Square Stem
- With Voting
- With Screen
- Chairman Unit

iMeeting X-Mic-VD

Voting, with screen, Delegate

NEW

- Square Stem
- With Voting
- With Screen
- Delegate Unit

iMeeting X-Mic-VNC

Voting, with screen, with nameplate, Chairman

NEW

- Square Stem
- With Voting
- With Screen
- With E-nameplate
- Chairman Unit

iMeeting X-Mic-VND

Voting, with screen, with nameplate, Delegate

NEW

- Square Stem
- With Voting
- With Screen
- With E-nameplate
- Delegate Unit

iMeeting X-Mic-RC

Pure Discussion, without screen, Chairman

NEW

- Round Stem
- Pure Discussion
- Without Screen
- Chairman Unit

iMeeting X-Mic-RD

Pure Discussion, without screen, Delegate

NEW

- Round Stem
- Pure Discussion
- Without Screen
- Delegate Unit

iMeeting X-Mic-VRC

Voting, with screen, Chairman

NEW

- Round Stem
- With Voting
- With Screen
- Chairman Unit

iMeeting X-Mic-VRD

Voting, with screen, Delegate

NEW

- Round Stem
- With Voting
- With Screen
- Delegate Unit

iMeeting X-Mic-VNRC

Voting, with screen, with nameplate, Chairman

NEW

- Round Stem
- With Voting
- With Screen
- With E-nameplate
- Chairman Unit

iMeeting X-Mic-VNRD

Voting, with screen, with nameplate, Delegate

NEW

- Round Stem
- With Voting
- With Screen
- With E-nameplate
- Delegate Unit

iMeeting X-Mic-LC

Lift type, 23-Arrary, Chairman

NEW

- Lift type
- Pure Discussion
- With 23x array microphones
- Chairman Unit

iMeeting X-Mic-LD

Lift type, 23-Arrary, Delegate

NEW

- Lift type
- Pure Discussion
- With 23x array microphones
- Delegate Unit

BYOD & BYOM

iShare Flip

4K60 Wireless Extenders

NEW

• Ultra Resolution: Supports 4K60 ultra-resolution transmission.
• Super Smooth Playback: Proprietary Seamless Technology ensures smooth video playback.
• Auto Pairing & Connection: Automatically establishes a connection using the most favorable Wi-Fi channel to guarantee exceptional wireless performance.
• 1-N Mode: supports one transmitter to multiple receivers mode.
• N-1 Mode: supports many-transmitters-to-one-receiver mode.

iShare X200

Wireless Presentation System

NEW

• Instant Show/ Hide.
• Dual WiFi.
• 0. 1s mirroring latency.
• Max. 4K UHD 60Hz output.
• 30m wireless range.
• Mirror via USB-A, HDMI, USB Type C dongles.
• Supports landscape or portrait screen.
• Max. 16 users connected simultaneously.
• No software installation is needed, plug and play.
• Touch control.
• Single view, 1x2 split view, or 2x2 quad-view.

iShare X100

Wireless Presentation 1 Image BYOD

NEW

• Wireless content input up to 4K, HDMI 2.0 output.
• Support native wireless mirroring protocols like Airplay, Miracast, and Chromecast.
• Support plug-n-play HDMI/Type-C dongles for wireless presentation.
• Support Android, macOS, and Windows apps for wireless presentation.
• Support wireless touch back on an interactive whiteboard/touch screen.

iShare X400

Wireless & Wired Presentation System

NEW

• Multiple control: front panel buttons, Web UI, and Telnet API.
• Supports USB extension and switching control among three USB hosts.
• Supports wireless connectivity over Airplay, Miracast, and dongles.
• Multiview presentation with configurable screen layout.
• HDMI output resolutions up to 4K@60Hz 4:4:4.
• HDMI input resolutions up to 4K@30Hz 4:4:4.
• Fast seamless switching.
• USB C or USB A wireless dongles.

iShare X400 Pro

Dual Screen BYOM Switcher

NEW

- Support reverse control of sources from touch screen.
- Provide native annotation and whiteboard tools with both outputs.
- Analogue audio extraction on stereo unbalanced 3.5mm jack connector.
- One channel RS232 can control 3rd party devices or be controlled.
- Provide API commands for RS232 and Telnet control.
- Provide powerful and intuitive web control interface.
- Provide GPI control interfaces with customizable function.
- All data transmitted is encrypted with RSA & AES.
- Support with LAN EAP certification.
- Support customization with home screen page.
- Provide OTA (on-the-air) firmware upgrade.
- Support digital signage streaming.

MODELS	iShare X100	iShare X200	iShare X400
Max. 1 image/ Display	√		
Max. 2 images/ Display		√	
Max. 4 images/ Display			√
Max. 8 images/ Display			
Type C dongle	√	√	√
HDMI dongle	√	√	√
USB A dongle			
3-in-1 dongle			
2-in-1 dongle			
Wired connection			
Windows	√	√	√
macOS	√	√	√
Android	√	√	√
Google Chrome	√	√	√
Ubuntun			
EShare			
Touch-back Control			√
Mirror-back Control			
Whiteboard	√	√	√
Push button			
RS232		√	√
KVM			
Dual Screen			
BYOD	√	√	√

iMeeting BYOD H31

HDMI 4K 3x1 Multi-format Presentation Switcher

• HDMI, Mini DP, and USB-C signals to HDMI out.
• Auto-detect the input signal, the last connected source will be switched.
• Mini DP and USB-C input resolution up to 4K60 4:4:4.
• HDMI input and output video resolutions up to 4K60 4:4:4 HDR and Dolby Vision.
• HDCP 2.2 compliant.
• Powered via USB-A from the display end.
• LED for power indicating.

iMeeting BYOD H61

6x1 Presentation Switcher 4K

• Lightning, USB-C, MINI DP, DP and Type-A HDMI input signal to HDMI out.
• Auto-detect the input signal, the last connected source will be switched.
• HDMI, DP and USB-C input video resolution up to 4Kx2K/30.
• HDMI output video resolutions up to 4Kx2K@30Hz 4:4:4.

Meeting Group

iCam XE2

Video Conference Group

NEW

- Meeting Group with 1x PTZ camera, 1x Speakerphone, 2x expansion mic, 1x Hub
- Ultra HD 4K PTZ camera with 12x Optical Zoom.
- Full-duplex speakerphone with 2x expansion mic, support 9m sound pickup range.
- Plug-n-play solution for medium-to-large meeting rooms.
- Compatible with all UC software like Zoom, Microsoft Teams, Skype, WebEx...

Meeting Camera

iCam 360

360° Panoramic All-in-One Conference

HOT

- 4-lense full panoramic 360° FoV
- 1/3.06 SONY sensor, 13 Megapixel
- 4K UltraHD, 3840x2160
- Auto Focus
- Field of View: 360°
- 2D & 3D noise reduction
- Auto White Balance
- Microphone: Pickup up to 32 feet
- I/O: USB Type-C
- All-in-One: camera, speakers and mics
- Six (6) Display Modes
- Voice direction detection

iCam VB50

All-in-One USB Camera Video Bar

- All-in-One: 4K camera, microphone, and speakers
- 4K resolution, and 5x digital zoom
- Single USB 3.0 connection
- MPT + ePTZ
- Auto-framing & Speaker Voice tracking
- 120 degrees wide-angle lens
- HDMI 2.0, USB Type C
- Bluetooth supported
- 2x Camera presets
- Extension Microphone supported (Model: iSpeaker M100)

iCam VB40

All-in-One USB Camera Video Bar

- 4K Ultra HD image sensor, ePTZ supported, suitable for small and medium-sized meeting rooms.
- Built-in 2*4W speakerphone, 5.8G Wireless or USB 3.0 connection optional.
- Omni-directional microphone standby time up to 6 months, working time up to 8 hours.
- World-class echo cancellation, noise cancellation, howling suppression.
- Dynamic noise suppression technology.

iCam VB60

All-in-One USB Camera Video Bar

4K@30fps UHD video
- Speaker Tracking, Auto Framing, and Close-up Group View
- 5-element Omnidirectional microphones
- Noise-suppression/ Echo Cancellation/ AGC
- Effective pickup distance of up to 5 meters
- echo-free
- Daisy chain with max. 4pcs iSpeaker M500 to adapt to all sizes of the conference room
- Plug & Play, connect to PC via USB

iCam VB80

All-in-One Conference Videobar with switcher and BYOD/BYOM

NEW

• Smart video conference collaboration with the all-in-one video speakerphone and camera solution.
• Wired screen presentation via USB-C (with DP) and HDMI.
• Wireless BYOD via Airplay, Miracast and Dongle (Dongle model: iShare MC).
• Wide angle 4K video camera with 120˚ FOV.
• 4x MEMS digital microphone arrays with a range of 5-8 meters and an angle of 180˚.
• 2x 8W Stereo full-range speakers with passive radiator bass enhancement.
• Includes AEC (Acoustic Echo Cancellation), AGC (Automatic Gain Control), ANS (Automatic Noise Suppression) and full-duplex mode communication to make all participants feel like they are in the same room.
• Auto Framing / Speaker Tracking / Presenter Tracking based on AI technology makes meetings more intimate and friendly.
• Plug and play with excellent compatibility for OS and UC applications, such as Zoom, Teams, Webex, Skype, BlueJeans, etc.
• Provides flexible control options of Web GUI and Remote Controller.
• Built-in Wi-Fi.
• Support max. 5pcs microphones expansion (Model: iCam VB8-Mic)

iCam 100

All-in-One USB Camera w/ 360˚ speaker/mic

• Omnidirectional 4 microphones 5-meter far-field clear voice pickup
• Exclusive AI noise-suppression
• 100˚ full HD wide-angle camera
• Plug & play
• Audio & video all-in-one
• intuitive touch control

Meeting Camera

Compare Models: Videobars

MODELS	VB40	VB50	VB60	VB80
All-in-One	√	√	√	√
4K30	√	√	√	√
Speaker Tracking	×	√	√	√
Auto Framing	√	√	√	√
Close-up View			√	
HFOV	110°	110°	107°	107.5°
DFOV	120°	120°	118°	120°
PTZ		MPT		
ePTZ	√	√	√	√
Zoom	4x	5x	5x	5x
True WDR	√	√		
Bluetooth		√		
HDMI Out		√		√
Sound Pickup	3m	6m	5m	8m
Camera Presets	×	2	2	3
Expansion Mic	Wireless	USB 2.0	RJ45	RJ45
Expansion microphones	3	1	4	5
Daisy Chain Mic	√		√	√
USB (Host-Device)	3.0	3.0	3.0	3.0
USB HID				√
WiFi				√
Android OS				√
Wireless BYOD				√
Wired BYOM				√

iCam P10

HD PTZ Conference Camera

- Panasonic 1/2.7 inch, 2.07M pixels HD CMOS sensor, Full HD 1920 x 1080p.
- Built-in microphone, 5 meters pickup distance.
- HFOV 72.5˚, 12x optical and 16x digital zoom.
- USB3.0 connection
- RS232 protocol control, max. 255 presets.
- Low lighting conditions improvement
- 2D and 3D DNR and WDR technology.
- Responsive autofocus keeps images sharp and clear, even after zooming.
- Plug and play USB connection.

iCam P12U

USB 3.0 HD Video Conference Camera

- HFOV 71˚, 20x Optical + 16x Digital Zoom.
- 1080P Full HD: High-quality HD CMOS sensor with 2.07 million effective pixels.
- USB 3.0 connection
- Low illumination, 2D and 3D noise reduction.
- AAC Audio Encoding.

iCam P11

Dual-lens Auto Framing Camera

HOT

- 12x HD Dual-lens Auto Framing PTZ Camera
- Dual-lens design: 1x panoramic camera for detecting, 1x PTZ camera for tracking
- Support SDI, HDMI, RJ45 and USB 3.0 outputs;
- 12X Optical Zoom ；
- Motion & Facial Framing
- RSTP / RTMP Streaming
- 1080p@60 SDI Feed ；1080p@60 IP Feed
- 72.5˚ Field of View
- IR remote and RS-232, RS-485 control

iCam P13/P13N

HD PTZ Conference Camera

- H.265 Encode.
- AAC Audio Encoding.
- HFOV 60.7˚, 30x Optical + 8x Digital Zoom.
- Low illumination, 2D and 3D noise reduction.
- Support 3G-SDI, HDMI, CVBS, and Network outputs.
- 1080P Full HD: High-quality HD CMOS sensor with 2.07 million effective pixels.
- # The model iCam P13N supports NDI.

iCam P20/P20N

4K UHD PTZ camera with auto tracking

HOT

• AI Intelligent Tracking
• Built-in AI processor, using deep learning technology to use human shape features, no matter where the face is facing, it can achieve smooth automatic tracking of human shape, which is very suitable for automatic target tracking in lectures, lectures, teaching, and other scenes.
• 80° Wide-angle Lens + 12x Optical Zoom
• The application of 3D digital noise reduction algorithm greatly reduces image noise. Even under the condition of ultra-low illumination.
• It supports HDMI 1.4b HD output and 3G-SDI interface
• *Note: Model iCam P20N with NDI activated.

iCam P40

HD PTZ Conference Camera with lecturer tracking

HOT

• 20x HD Dual-lens Lecturer Tracking PTZ Camera
• AI-based human body detection and lock tracking;
• 1080P60 SDI video output of tracking camera;
• Adjust automatically as per the height of the lecturer/ teacher;
• 3G-SDI, HDMI, Ethernet and USB3.0 video output interface;
• Support UVC/UAC protocol;
• Support remote and RS-232 control.

iCam P30/ P30N

4K60 PTZ Conference Camera

• 2D/3D Noise Reduction, WDR.
• Support PoE, RS232, RS485, IR.
• HFOV 71°, 12x optical and 16x digital zoom.
• Built-in Microphone, 9 meters pickup distance.
• Low light environment enhancement technology.
• 4K60 UHD: SONY 1/ 2.5 inch, 8.51 million pixel 4K UHD CMOS sensor.
• USB3.0 connection
• # The model iCam P30N supports NDI.

iCam PT40

1080P HD Dual-lens PTZ Camera

NEW

• Implemented with AI audio positioning, body detection, and recognition tech, precisely frame speakers, giving the best views of speakers and other attendees.
• Innovative dual-lens design for tracking views and full views with auto and quick switching.
• Various modes of speaker tracking and auto recognition, and a close-up shot of board writing.
• No hand operation is involved, helping attendees focus on the meeting and discussion.
• Designed for medium and large-sized meeting rooms, classrooms, and halls, covering a range of up to 8 meters.
• Tracking cams: 12X optical zoom, HFOV up to 72.5°.

Meeting Camera

Compare Models: PTZ Cameras

MODELS	iCam P10	iCam P11	iCam P12U	iCam P13/P13N	iCam P20/P20N	iCam P30	iCam P40
Resolution	Max. 1080P	Max. 1080P	Max. 1080P	Max. 1080P	Max. 4K60	Max. 4K60	Max. 1080P
Sensor	1/2.7'', CMOS, Effective Pixel: 2.07M	1/2.8" CMOS, 2.14 megapixel	1/2.7'', CMOS, Effective Pixel: 2.07M	1/2.7'', CMOS, Effective Pixel: 2.07M	1/2.8 inch, CMOS, effective pixels: 8.40M	1/2.5'', CMOS, Max Effective Pixel: 851M	1/2.8" CMOS, 2.14 megapixel
Optical Zoom	12x	12x	20x	30x	12x	12x	20x
Digital Zoom	16x	8x	16x	8x	16x	16x	8x
Horizontal Angle of View	72.5˚ ~ 6.9˚	88˚	51.3˚ ~ 2.7˚	60.7˚ ~ 2.28˚	80.8˚ ~ 7.5˚	71˚ ~ 8.2˚	88˚
Vertical Angle of View	44.8˚ ~ 3.9˚	54˚	29.7˚ ~ 1.5˚	34.1˚ ~ 1.28˚	49.9˚ ~ 4.3˚	42.7˚ ~ 4.5˚	54˚
Horizontal Rotation Range	±170˚	±170˚	±170˚	±170˚	±170˚	±170˚	±170˚
Vertical Rotation Range	-25˚ ~ +25˚	-30˚ ~ +90˚	-30˚ ~ +90˚	-30˚ ~ +90˚	-30˚ ~ +90˚	-30˚ ~ +90˚	-30˚ ~ +90˚
Microphone Pickup	6m	Without	Without	Without	Without	9m	
USB 3.0	√ (3.0 B)	√ (3.0 B)	√ (3.0 B)		√ (3.0 C)	√ (3.0 B)	√ (3.0 B)
RJ45		√	√	√	√ (NDI+PoE)	√	√
NDI				iCam P13N	√	√ (iCam P30N with NDI)	
HDMI Out		√	√	√	√	√	DVI
2D/3D Noise Reduction	√	√	√	√	√	√	√
WDR	√	√	√	√	√	√	√
Line In	√	√	√	√	√	√	√
3G SDI	√	√		√	√	√	√
Low lighting	√	√	√	√	√	√	√
RS232	√	√	√	√	√	√	√
RS485					√	×	√
Target Tracking		Auto Framing			√	×	Dual-lens tracking

iCam 200H

AI 4K Video Conference Camera w/ HDMI

- Ultra 4K HD: 4K@30fps/25fps
- USB 3.0 connection
- 1x HDMI streaming
- Lens: Wide-angle up to 120° with ePTZ.
- Built-in Microphone: pickup up to 12 meters
- Support WDR
- Easy Installation: Wall mounting, on top of the display, on the desk, or tripod (model iMount 3710).
- Auto framing

iCam 200U

AI 4K Video Conference Camera USB version

- Ultra 4K HD: 4K@30fps/25fps
- USB 3.0 connection
- Lens: Wide-angle up to 120° with ePTZ.
- Built-in Microphone: pickup up to 12 meters
- Support WDR
- Easy Installation: Wall mounting, on top of the display, on the desk, or tripod (model iMount 3710).
- Auto framing

Meeting Camera

Compare Models: Webcams

MODELS	iCam 100	iCam 200	iCam 200H	iCam 200U	iCam 360
All-in-One	√	×	×	×	√
4K30	×	√	√	√	×
1080P	√	√	√	√	√
Speaker Tracking	-	-	-	-	√
Auto Framing	×	√	√	√	√
HFOV	100°	120°	120°	120°	360°
PTZ	-	-	-	-	-
ePTZ	×	√	√	√	√
Zoom	×	4x	8x	8x	
True WDR	√	√	√	√	√
HDMI Out	×	×	√	×	×
Sound Pickup	5m	5m	12m	12m	5m
Camera Presets	-	10	10	10	
USB (Host-Device)	3.0 C	3.0 B	3.0 B	3.0 B	3.0 C
OSD Menu	×	√	√	√	
Touch control	√	×	×	×	√
4 Lens					√
Compose Mode					√
Manual Mode					√
Body-fit Mode					√
Grid Mode					√
Presentation Mode					√
Speaker Mode					√
Discussion Mode					√

Mic & Speaker

iSpeaker CS100

100W Column Speaker

NEW

- 4x2.5" Neodymium Magnets
- High Voltage/ Constant Impedance adjustable
- Music/ human voice adjustable
- Sensitivity level (1m/1W 4Ω): 94dB
- Sensitivity level (1m/1W 70V/100V): 92dB
- Rated power (4Ω): 100W
- Rated power (70V): 60W / 30W / 15W / 7.5W
- Rated power (100V): 30W / 15W / 7.5W / 3.7W
- Diffusion angle: 20° vertically, 120° horizontally
- Effective frequency range 106Hz~20KHz

iSpeaker AAC4

40W Ceiling Speaker

NEW

- Rated power (8Ω): 40W
- Rated power (70V): 40W/20W/10W/5W
- Rated power (100V): 40W/20W/10W
- Frequency Response: 57Hz-20KHz
- 6.5-inch semi-automatic
- High Voltage and Constant Impedance
- Tweeter: 1'' rotatable silk soft dome
- Woofer: 6.5'' polypropylene cone
- Sensitivity: 90dB@1W/1m

iSpeaker AAC6

Ceiling Speaker 6.5"

NEW

- 1x6.5"+1x1" dome, coaxial design.
- Sensitivity of 95dB
- Output power of 60W
- Rated power (8Ω fixed resistance): 60W (240W, PEAK)
- Rated power (70V constant voltage): 20W, 10W, 5W, 2.5W
- Rated power (100V constant voltage): 40W, 20W, 10W, 5W
- Designed with 8x N42 high-strength magnets
- With anti-dropping rope.
- Easy wiring: Front-out wiring cable raceway.

iSpeaker Mini-15

15W Mini Ceiling Speaker

NEW

- 4Ω 15W Rated Power
- Small-factor size, space-saving
- 2.5" Full range speaker
- Aluminum Cone
- 85dB Sensitivity
- Frequency Response: 90Hz-20KHz
- With a magnetic mesh cover

iSpeaker P30B

30W Pendant Speaker, Black.

HOT

- Compliant with the EN54-24 standards.
- Indoor-Outdoor Commercial music & paging speaker with 70V and 100V transformer.
- IP44 for indoor pendant speaker with safety hanging wire.
- UV-fire resistant ABS cabinet for durable use.
- 5.25" full range PP woofer speaker system.
- 70 Volt/100 Volt transformer with 8 Ohm bypass
- 70V power taps 30W, 15W, 7.5W, 3.8W and 1.9W.
- 100V power taps 30W, 15W, 7.5W, 3.8W.
- 8Ω power 30W only.
- Pendant wall speaker of special dispersion loudspeakers.
- Fireproof phoenix connector, 95°C fire-resistant cable and thermal fuse.
- Indoor Applications: Restaurants, Offices, Meeting Rooms, Auditoriums, Gymnasiums, Sports Bars, Pubs, Coffee Shops, retail stores, and shopping malls.
- Euroblock screw terminal connector

iSpeaker DCS60

60W Dante Column Speaker

NEW

- 4x2.5" Neodymium Magnets
- Sensitivity of 93dB
- Rated power 60W
- Supports Dante
- Supports PoE: 802.3af/802.3at/802.3bt
- Diffusion angle: 20° vertically, 120° horizontally
- Streamlined design and a newly designed industrial black color.
- It is suitable for sound reinforcement in various architectural spaces and has beautiful sound quality.

iSpeaker DAP10

Dante Active full-range speakers, 10"

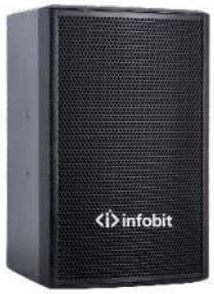

- Power amplifier module power (8Ω): 300W
- Power amplifier module power (4Ω): 600W
- THD+N (10% of rated power): <0. 6% IMD-SMPTE (10% of rated power): 0. 9% CROSSTALK: >65dB
- Frequency response (Hz): 93dB
- Signal-to-noise ratio (A): >93dB
- Power input AC: 220V 50/60Hz
- Operating temperature:(-15°C～+40°C)

iSpeaker DAC6S

Dante Ceiling Speaker 6.5"

NEW

- 1x6.5"+1x1" dome
- Sensitivity of 93dB
- Output power of 60W
- Rated power (8Ω fixed resistance): 60W
- Designed with 8x N42 high-strength magnets, more stable.
- With anti-dropping rope.
- Easy wiring: Front-out wiring cable raceway.
- Suitable for narrow ceiling spaces.
- Supports Dante
- Supports PoE: 802.3af/802.3at/802.3bt

iSpeaker DAP6

Dante Active Speaker 6"

- Built-in amplifier module, digital signal processing.
- Support for POE power and Dante transmission, single channel, 60W@4 ohms.
- The PoE module uses the DanteTM network protocol, 24-bit high-quality audio (44.1K/48KHz) and control signals can be sent via DanteTM and controlled by the DanteTMController.
- The module has an integrated DSP containing gain control, mute control, level, temperature display, 5-band equalizer, and limit control functions.

MODELS	iSpeaker AAC6	iSpeaker DAC6S	iSpeaker DCS60	iSpeaker CS100	iSpeaker DAP6	iSpeaker DAP10	iSpeaker P30B
Type	Ceiling Speaker	Ceiling Speaker	Column Speaker	Column Speaker	Wall Speaker	Wall Speaker	Pendant Speaker
Suport Dante		√	√		√	√	
Rated Power (Dante)		60W	60W		4Ohm: 60W	4Ohm: 600W; 8Ohm: 300W	
Rated Power 4Ohm				100W			
Rated Power 8Ohm	60W						30W
Rated Power 70V	20W, 10W, 5W, 2.5W			60W, 30W, 15W, 7.5W			30W, 15W, 7.5W, 3.8W, 1.9W
Rated Power 100V	40W, 20W, 10W, 5W			30W, 15W, 7.5W, 3.7W			30W, 15W, 7.5W, 3.8W
Music & Speech adjustable				√			

iSpeaker CM710

Daisy-chaining Digital Ceiling Microphone Array

HOT

- Daisy-chaining Digital Ceiling Microphone Array
- Digital array microphone, 8 meters long-distance voice pickup
- daisy-chaining, supporting up to 4 units cascaded.
- Type-C interface, plug and play.
- PoE interfaces, support long-distance power supply and data transmission.
- Intelligent noise reduction, echo cancellation, reverberation suppression and full duplex communication
- Available for ceiling mounting, wall mounting and desktop use.

iSpeaker CM360

Dante Ceiling Microphone

NEW

- 128x MEMS microphone array
- Supports Dante
- Supports 8x local pickup zones.
- Supports 8x local sound reinforcement zones.
- Supports 1x local mute zone.
- Supports 8 meters of pickup distance.
- Supports unlimited cascading.

iSpeaker MD30 (Dante)

Cable Wired Gooseneck Dante microphone

- Top gold film hi-fi microphone head, high-quality sound pickup guarantee, full metal microphone pole design.
- High-sensitivity microphone head, ultra-cardioid pickup effect, the best pickup distance of 10-50CM.
- With microphone physical on/off key.
- System unit provides DANTE digital audio output interface.

iSpeaker M100

USB Omnidirectional Microphone

- Plug and play: USB connection
- Best-in-Class Sound
- Small and portable
- High Compatibility
- 6 meters 360° pickup
- Suitable for your meeting room or home office
- Cascading with iCam VB50

iSpeaker M700

Digital Array Microphone

• Simple Installation, Plug and Play: Ceiling mounting, wall mounting, desktop or tripod.
• Digital array microphone, 8-10 meter distance voice pickup. A hands-free lecture and presentation solution.
• Intelligent noise reduction, echo cancellation, and reverberation suppression to ensure clear sound quality and comfortable communication.
• USB 2.0 and 3.5 mm audio
• Supports dual-mode (digital, analog) outputs.

iSpeaker M800

2.4G Wireless Conference Microphones Kit

• Battery: 1,800 mAh battery, 40 hours working time.
• Compatibility: Plug & play, compatible with Windows, macOS, Android, and Linux.
• Interfaces and ports: Volume +, Volume -, Mute Microphone, Mute Speaker
• Omni-directional Microphone: 4x Full duplex Omnidirectional Mic, with 5 meters pickup range covering 80-100 sqm room.
• 2.4G Wireless Transmission: with a stable connection from the daisy-chained microphones to the audio master receiver, the maximum distance between them can be reached up to 12 meters.

Mic & Speaker

Compare Models: Microphones

MODELS	M100	M700	CM360	CM710	M800	MD30 (Dante)
Microphone	√	√	√	√	√	√
3.5mm audio	√	√		√	6.5mm	
Audio Pickup distance	6m	8m	8m	8m	5m	
360° omnidirectional	√	√	√	√	√	
Work with iCam VB50	√					
Coverage	15-30㎡	100-200㎡	100-200㎡	100-200㎡	80-100㎡	
Participants	5-8	20+	20+	20+	20+	
USB Connect	1x Micro	1x USB B	1x RJ45 Dante	1x USB C	1x USB B	
Battery					√	
2.4G/ 5.8G					√	
Cascaded			Unlimted	4x	4x	Unlimted
Speaker Tracking		√	√			
Voice Lift			√			

iSpeaker A20

USB Digital Speakerphone Kit

NEW

• One host speakerphone (w/ 4 mic array) and two expansion mics (w/ 1 mic array each)
• Built-in AI beam-forming algorithm, precisely locates the source of the sound
• Effectively eliminate the background noise (cough, mouse-clicking, knocking, fan, typing, etc)
• For full duplex calls, echo cancellation
• Max voice pickup range could be 100 m2
• Plug and play, with tidy cable management
• Effective pickup radius 10m
• Reverberation suppression

iSpeaker M250

USB Speakerphone

NEW

• Connect easily with Bluetooth and USB options.
• With 4 Microphones in four directions, it supports 360-degree clear and rich audio picking up.
• Supports simple, intuitive touch controls and LED indicators.
• Long battery life, about 10h
• Supports 4~6 people meeting together.
• Easy plug and play
• Compatible with Mac OS, Windows OS, Android OS and iOS

iSpeaker M260

USB Speakerphone with USB & HDMI Hub

NEW

With 4 Microphones built-in, it supports 360-degree clear and rich audio picking up within 3 - 5m.
• Audio DSP algorithm, enhance human voice and optimize the experience in conference.
• Supports HDMI or USB-C 4K@60Hz UHD video output.
• Supports 85W PD charging
• Dual USB 3.2 10Gbps ports

iSpeaker M400

USB Conference Speakerphone

• Echo cancellation.
• Small and portable size.
• USB + Bluetooth + Dongle connection.
• Built-in 4,000mAh battery with 18 hours talk time.
• 360° Omnidirectional Speakerphone with 5 meters pickup range.
• Buttons: Bluetooth, Mic mute, Volume +, Volume -, Pickup/ hang up, power.
• Cascading: daisy chain 2 sets M400 speakerphones by a 3.5mm Audio cable.

iSpeaker M500

USB Omnidirectional Speakerphone

- 8-element Beamforming omnidirectional microphones
- Full-duplex communication
- Echo Cancellation, Automatic Gain Control AGC and Reverberation Suppression
- Up to 5 meters of voice pickup
- Button: Power, Volume +/-, Mute Mic, Answer/Reject*
- Maximum daisy chain unites: 5 units iSpeaker M500 via ethernet cable
- Daisy chain with iCam VB60: up to 4 units cascading

iSpeaker M600

5.8G Wireless Cascade Speakerphones, 100 square meters coverage

- 5.8G Wireless Transmission: With A Stable Connection
- Up To 12 Meters.
- Omni-Directional Microphone: Full Duplex
- Omnidirectional Mic, With 10 Meters Pickup Range
- Covering 100 Sqm Room.
- Battery: 2,400 MAh Battery, 4 Hours Talk Time
- Interfaces And Ports: Volume +, Volume -, Mute Microphone, Mute Speaker, USB Power Supply, Pickup/ Hangup

iSpeaker CM800

All-in-One Speakerphone with UC Control

- All-in-One Design: Microphone and Speaker
- Built-in Audio Console and Status Indicator
- Android 8.1 Tablet with 10.1" Touch Screen
- Bluetooth, 3.5mm Audio, HDMI input
- Zoom Room Controller support
- Support all VC softwares like Zoom, Teams, Skype, Webex, BlueJeans, GoToMeeting.. when the CM800 works as an standalone speakerphone
- *Not support Microsoft Teams Room (MTR), without MTR controller.

Mic & Speaker

Compare Models: Speakerphones

MODELS	M200	M230	M250	M260	M300	M400	M500	M600	CM800	A20
Microphone	√	√	√	√	√	√	√	√	√	√
Speakerphone	√	√	√	√	√	√	√	√	√	√
3.5mm audio	√				√	√			√	
Audio Pickup distance	6m	3m	3m	3m	6m	5m	5m	10m	3m	10m
360° omnidirectional	√	√	√	√	√	√	√	√	√	√
Work with iCam VB60							√			
Coverage	15-30㎡	15-20㎡	15-20㎡	15-20㎡	15-30㎡	20-30㎡	100-300㎡	100㎡	15-20㎡	100-200㎡
Participants	5-8	5-8	5-8	5-8	6-12	8-12	20+	20+	5-8	20+
USB Connect	1x Micro	1x USB A	1x USB C	1x USB C	1x USB C	1x USB C	1x USB C		1x USB C	1x USB C
Bluetooth		√	√		√	√			√	
Battery		√	√		√	√		√		
2.4G/ 5.8G		2.4G	2.4G					5.8G		
Cascaded						2x	5x	2x		2x mic
Speaker Tracking			√	√						
Android OS									√	
UC control									√	
Zoom Room Controller									√	
Touch panel									√	
WiFi									√	
With USB/HDMI Hub				√						

Meeting Room PC

iMeeting A7

Intel i7 Mini Pc with Windows 11

- 12th Generation INTEL i7 Core Processors
- Windows 11 Pro 64 BIT OEM, Activated
- 2* SODIMM DDR4 memory slot, 16GB RAM
- 1* M.2 2280 NVME/ PCIE3.0x4/SATA SSD
- 256G NVME SSD
- 1* 2.5'' SATA3.0 HDD/SSD
- Bluetooth 4 and WIFI 6
- 1* DP 8K60Hz
- 1* HDMI 2.0 4K60Hz
- 1* USB Type C Thunderbolt 4
- 2* USB 2.0, 3* USB 3.0
- 1x 3.5mm Audio, 1x 3.5mm Mic
- 2x RJ45 Ethernet ports

Headset

iVoice H300 (NEW)

USB office headset w/ in-line control

NEW

- Built-in USB sound driver, clear sound quality
- Adjustable headband, lightweight, no ache after long-wearing
- Adjustable mic, 330 degrees
- Cord length: 2.12 meters
- USB A and 3.5mm ports, 2-in-1 design.
- Rotatable Design: Adjustable headband, rotatable earpads, foldable structure
- Super Noise-Cancelling Mic: Bring you an independent and quiet office and learning environment.
- In-line Control: Volume +, Volume -, Mute mic

iVoice B300

Bluetooth ANC office headset with on-ear control

- Bluetooth version: V4.1
- Battery: 1,050 mAh
- Talking Time: 70 hours
- Music playing: 65 hrs (ANC off)/26 hrs (ANC on)
- Standby Time: 210 days
- Charging Voltage: 5V
- Charging Time: about 3 -4 hours
- Speaker: 30mW
- Wireless Range: 20m
- RF frequency: 2.402-2.480 GHz
- Built-in Microphone, answer/hang up calls

MODELS	H300	B300
USB A	√	
USB C		
3.5mm	√	√
Bluetooth		√
Foldable	√	√
Control	In-line	On-ear
Left-right microphone switching		
Battery		√
Support Siri		√

Dante Audio

iTrans HD-ARC

HDMI ARC Audio to Dante Converter

NEW

- HDMI ARC audio input.
- Supports AES67 protocol.
- Controllable via Dante Controller.
- Powered by PoE or DC 5V.
- Sample Rate 44.1/48kHz
- Frequency Response 20Hz-20kHz, ±0.5dB

iSound 44D

4x4 Digital Sound Processor w/ Dante

NEW

- 4x4 Dante Audio Processor Box
- Realize interfacial audio signal processing
- Supports 4-way analog audio signal balanced input/ output, 4-way Dante digital audio signal input of 2 Dante devices, and the 4-way Dante digital audio signal output.
- DSP processing functions include gain adjustment, 5-stage parameter equalization, compressor, mixer, 15-stage graphic equalization, limiter, setting, etc.
- Support network connection Windows PC control software.
- POE power supply

iSound 1616D

16x16 Digital Sound Processor w/ Dante

NEW

- 16 balanced microphone or line-level inputs Terminal Block connectors
- 16 balanced line-level outputs Terminal Block connectors
- 2 Dante audio interfaces, RJ45 connectors
- 8 GPIO multi-function ports
- Dante audio channels up to 16×16
- Supports adaptive echo cancellation (AEC), adaptive feedback control (AFC), automatic gain control (AGC), automatic mixture control (AMC), automatic noise suppression (ANS)
- With 16x48V phantom power.

iSound 88D

8x8 Digital Sound Processor w/ Dante

NEW

- 4 balanced microphone or line-level inputs Terminal Block connectors
- 4 balanced line-level outputs Terminal Block connectors
- 2 Dante audio interfaces, RJ-45 connectors
- Dante audio channels up to 4×4
- Definable GUI
- Supports adaptive echo cancellation (AEC), adaptive feedback control (AFC), automatic gain control (AGC), automatic mixture control (AMC), automatic noise suppression (ANS)
- With 4x48V phantom power.

iControl A08

8-button Dante Audio Controller

NEW

- 8x programable buttons support customized functions
- 1x programable control knob, with 8 indicators showing the control status.
- Partnered with one or more iSound Series DSPs from INFOBIT AV
- A range of audio control abilities such as volume, mixing, and scene switching.
- PoE power supply and UDP communication
- Can control the 3rd party device through iSound DSPs.
- Note: Must work with INFOBIT iSound DSPs.

iControl A32

32-menu Dante Audio Controller

NEW

- 32x customized functions
- 1x programable control knob, with 8 indicators showing the control status.
- Partnered with one or more iSound Series DSPs from INFOBIT AV
- A range of audio control abilities such as volume, mixing, and scene switching.
- PoE power supply and UDP communication
- Can control the 3rd party device through iSound DSPs.
- Note: Must work with INFOBIT iSound DSPs.

iTrans DX-22-US

XLR Dante Wallplate US version

NEW

- 2x Inputs + 2x Outputs (Dante® in and Dante® out)
- Balanced/unbalanced XLR analog audio
- MIC Phantom 48V Power and on/off via a hard button
- Input sensitivity and output gain control to adjust for different levels of MIC/XLR
- Dante® audio sampling rate supports 44.1/48/88.2/96KHz@24bit
- Configurable Dante® device latency (supports 1, ,2 or 5ms configurable using Dante® Controller)
- Supports AES67 RTP audio transport
- With a magnetic cover, easy to install.
- PoE & local power options
- Standard 2-GANG US faceplate design

iTrans DX-22-EUK

XLR Dante Wallplate EU & UK version

NEW

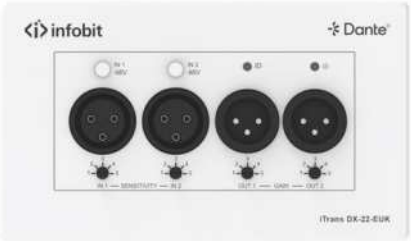

- 2x Inputs + 2x Outputs (Dante® in and Dante® out)
- Balanced/unbalanced XLR analog audio
- MIC Phantom 48V Power and on/off via a hard button
- Input sensitivity and output gain control to adjust for different levels of MIC/XLR
- Dante® audio sampling rate supports 44.1/48/88.2/96KHz@24bit
- Configurable Dante® device latency (supports 1, ,2 or 5ms configurable using Dante® Controller)
- Supports AES67 RTP audio transport
- EU and UK all-in-one design
- With a magnetic cover, easy to install.
- PoE & local power options
- Standard 2-GANG EU/UK faceplate design

iTrans DX-T-22

2CH XLR to Dante Analog Transmitter

- 2CH XLR to Dante Analog Transmitter
- Conversion between analog audio and Dante digital audio signals.
- Built-in 2 input audio channels.
- Supports PoE

iTrans DX-R-22

2CH Dante to XLR Analog Receiver

- 2CH Dante to XLR Analog Receiver
- Built-in 2 output audio channels.
- Extend audio, control, Ethernet, and power with Cat cable.
- Supports Dante software
- Supports PoE

MODELS	iTrans DX-22-EUK	iTrans DX-22-US
Name	XLR Dante Wallplate EU & UK version	XLR Dante Wallplate US version
Color	White	White
Channel	2x2 Dante, 2x2 XLR inputs and outputs	2x2 Dante, 2x2 XLR inputs and outputs
Frequency response	20Hz to 20kHz (-/+0.5dB)	20Hz to 20kHz (-/+0.5dB)
Input Connector	Dante 2x; XLR 2x	Dante 2x; XLR 2x
Output Connector	Dante 2x; XLR 2x	Dante 2x; XLR 2x
Magnetic cover	√	√

MODELS	iTrans DX-T-22	iTrans DX-R-22
Name	2CH XLR to Dante Analog Transmitter	2CH Dante to XLR Analog Receiver
Channel	2 Ch analog Inputs, 2 CH Dante output	2 CH Dante input, 2 CH analog outputs
Frequency response	20Hz to 20kHz (-/+0.5dB)	20Hz to 20kHz (-/+0.5dB)
Input Connector	2x XLR-F	1x RJ45
Output Connector	1x RJ45	2x XLR-M

iTrans DB22

Dante® 2CH Bluetooth Input Adapter

NEW

- Two-channel Bluetooth audio to Dante® 2CH digital audio
- Supports Bluetooth V5.1, SBC/AAC/APTX/APTX-LL/APTX-HD, up to 192KHz@24bit
- Dante® audio sampling rate supports 48KHz@24bit
- Dante® audio delay supports 1/2/5ms (configurable)
- Supports local USB-C port power supply and PoE function (Class 0 802.3af PoE)
- Compact design for easy and flexible installation
- Supports Bluetooth ID renaming.

iTrans DB44-EUK

4x3 CH Dante Bluetooth Wallplate EU & UK 2-Gang Version

NEW

- Dante 4×3 wall panel with Bluetooth.
- One-key pairing with back-lit indication;
- Supports Bluetooth 5.3, compliant with V5.0/4.0/2.1+EDR
- Transmission distance without obstruction: up to 20m.
- Compatible with most smartphones, Apple iPads, and Android tablets.
- Controllable by Web-UI, Dante Controller, or Dante Director software.
- Supports API for the central control.

iTrans DB44-US

4x3 CH Dante Bluetooth Wallplate US 2-Gang Version

NEW

- Dante 4×3 wall panel with Bluetooth.
- One-key pairing with back-lit indication;
- Supports Bluetooth 5.3, compliant with V5.0/4.0/2.1+EDR
- Transmission distance without obstruction: up to 20m.
- Compatible with most smartphones, Apple iPads, and Android tablets.
- Controllable by Web-UI, Dante Controller, or Dante Director software.

MODELS	iTrans DB22	iTrans DB-22W (Wall plate)
Name	Dante 2CH Analog Audio Encoder (Tx)	Dante 2CH Bluetooth Transmitter
Channel	2x1 Bluetooth to Dante	2x0 Dante, Bluetooth 2x2, RCA
Frequency response	48 kHz	20Hz to 20kHz (-/+0.5dB)
Input Connector	1x Bluetooth 5.0 (L+R), stereo	Dante 2x; Bluetooth 5.0, stereo RCA 2x
Output Connector	1x Dante	

iTrans DP-BOX-202

Dante 2CH analog audio encoder/ decoder

- Dante 2CH analog audio encoder/ decoder w/ PoE, Phoenix ports
- 2 analog inputs and 2 analog outputs for line or microphone level.
- Supports adjusting the gain per input from 0 ~ +48dB.
- Output volume control from -60 dB to 0 dB.
- 48V phantom power per input channel.
- Powered by PoE (IEEE802.3af).
- Supports 44.1k or 48k audio sample rate.
- Controllable by Dante controller and web UI.
- Supports AES67

iTrans DP-R-22

Dante Phoenix Receiver, 2CH w/ Gain control

HOT

- Balanced/unbalanced audio output (unbalanced access to "+" and "GND")
- Audio sampling rate supports 44.1KHz, 48KHz, 88.2KHz and 96KHz, @16bit/24bit/32bit
- Supports AES67 RTP audio transmission
- Audio output supports 5-level sensitivity adjustment: +24dBu, +4dBu, 0dBu, 0dBV and -10dBV
- Support DC 12V and PoE power supply (IEEE802.3af Class 1 compliant)

iTrans DP-T-22

Dante Phoenix Transmitter, 2CH w/ Gain control

HOT

- Balanced/unbalanced audio input (unbalanced access to "+" and "GND")
- Audio sampling rate supports 44.1KHz, 48KHz, 88.2KHz and 96KHz, @16bit/24bit/32bit
- Supports AES67 RTP audio transmission
- Audio input supports 5-level sensitivity adjustment: +24dBu, +4dBu, 0dBu, 0dBV and -10dBV
- Support DC 12V and PoE power supply (IEEE802.3af Class 1 compliant)

MODELS	iTrans DP-T-22	iTrans DP-R-22	iTrans DP-BOX-202
Name	iTrans Dante Phoenix Transmitter, 2CH	iTrans Dante Phoenix Receiver, 2CH	Dante 2CH Analog Audio Encoder/Decoder (TR)
Channel	2 Ch analog Inputs, 2 ch Dante output	2 CH Dante input, 2 ch analog outputs	2 CH Mic/Line IN, 2 CH Line Out, 2CH Dante Inputs and Outputs
Frequency response	20Hz to 20kHz (-/+0.5dB)	20Hz to 20kHz (-/+0.5dB)	44.1kHz or 48kHz
Input Connector	1x AUD [6-pin phoenix, 3.81mm]	1x DANTE [RJ45 connector, POE]	2x 3-pin Terminal Blocks IN; 1x DANTE
Output Connector	1x DANTE	1x AUD [6-pin phoenix, 3.81mm]	2x 3-pin Terminal Blocks Out; 1x DANTE

iTrans DU-TR-22B

USB B to Dante I/O Transceiver w/ Gain control

- Compliant with USB 2.0 Full Speed Operation and USB Audio Device Class Specification V1.0
- Dante solution supports AES67 RTP audio transmission
- Audio sampling rate supports 44.1KHz, 48KHz, 88.2KHz and 96KHz, @16/24/32bit
- Support USB 5V and PoE power supply (IEEE802.3af Class 0 compliant)

iTrans DU-TR-22C (v2)

Dante USB I/O Transceiver

- Dante USB I/O Transceiver
- Plug and Play
- 24-bit audio support
- 2X2 audio channels
- Supports 802.3af PoE
- 1 x Type-C to Type-C cable
- 1 x Type-C to Type-A cable
- Power over Ethernet (PoE) support

MODELS	DU-TR-22B	DU-TR-22A	DU-TR-22C
Name	iTrans Dante USB Transmitter Receiver, 2CH USB B	Dante 2CH USB Audio Endoder/Decoder (TR), USB A port	Dante 2CH USB Audio Endoder/Decoder (TR), USB C port
Channel	2 CH USB to Dante input and outputs	2 CH USB to Dante input and outputs	2 CH USB to Dante input and outputs
Frequency response	20Hz to 20kHz (-/+0.5dB)	48kHz	48kHz
Input Connector	1x USB-B; 1x DANTE [RJ45 connector, POE]	1x USB-A; 1x DANTE [RJ45 connector, POE]	1x USB-C; 1x DANTE [RJ45 connector, POE]
Output Connector	1x USB-B; 1x DANTE [RJ45 connector, POE]	1x USB-A; 1x DANTE [RJ45 connector, POE]	1x USB-C; 1x DANTE [RJ45 connector, POE]

Audio Distribution

iSound FBS

Feedback Suppressor

NEW

• Built-in 24Bit A/D, D/A conversion; 32-bit DSP processor.
• High-speed floating-point digital audio processor.
• Sub-Band and Echo cancellation technology.
• The working mode of fully automatic operation, is easy to use.
• 2.0-inch color display screen, the status display of each function of the equipment is concise and clear.

iSound PA20

2x20Watt/ 4Ohm amplifier

- 2x20Watt@4Ohm amplifier output.
- Bridge connection: 1x40 Watt@8Ohm
- Volume/Bass/Treble controllable by buttons IR remote & RS232.
- MIC port can support balance/unbalanced signal
- Line audio output at 3.5mm jack, with volume control
- Dual-mono function
- MIC mixer function
- MIC input supports 48V phantom power, dynamic MIC and wireless MIC.
- Supports cascading of multiple units.

iSound PAD150

150W Class D Amplifier with DSP and Dante

NEW

- Dante 2CH digital and Line balanced analog inputs
- Dante 2CH digital, Line-balanced analog and AMP outputs
- In Lo-Z output mode, single channel 150W 8 Ω or dual channel 75W 4Ω/8Ω can be selected.
- In Hi-Z output mode, single channel 150W to 70V/100V can be provided.
- 48KHz sampling rate, 24bit independent A/D and D/A converters
- 2x75W AMP out supports 4Ω/8Ω/70V/100V speaker
- Flexible control via RS-232, LAN and Web GUI
- Supports Dante

MODELS	iSound PA20	iSound PAD150
Rated Power 4Ohm	2x 20W	2x 75W
Rated Power 8Ohm	1x 40W	150W
Rated Power 70V/100V		150W
Dante		√
Control	RS232, IR, Buttons	RS232, Web GUI
Daisy chain	√	

Embedders & De-Embedders

iTrans AD01

HDMI 18Gbps Audio Extractor with HDCP 2.2

- HDMI 18Gbps Audio Extractor with HDCP 2.2
- HDMI 2.0b (18Gbps), HDCP 2.2 and DVI compliant
- Video resolutions up to 4K2K@50/60Hz (YUV444)
- Extracts HDMI audio to multi-channel optical (SPDIF) or L/R analog audio
- Optical audio supports LPCM 2CH, Dobly Digital 2/5.1 CH, DTS 2/5.1CH
- Supports HDMI High Bit Rate (HBR) audio pass-through
- Audio sample rates up to 192kHz ~ 10bits HDR pass-through
- Supports CEC bypass

iiTrans AD02

HDMI 18Gbps Audio Extractor with Audio Downmix

- HDMI 18Gbps Audio Extractor with Audio Downmix
- HDMI 2.0b (18Gbps), HDCP 2.2 and DVI compliant
- Video resolutions up to 4K2K@50/60Hz (YUV444)
- Extract HDMI audio to optical (SPDIF) or L/R
- HDMI Pass-through audio input to HDMI and optical audio output
- Bitstream audio down-mix to L/R analog output
- HDMI High Bit Rate(HBR) audio pass-through
- 10bits HDR (High Dynamic Range) pass-through
- Support CEC pass-through

iTrans-AE01

HDMI4K60 18Gbps Audio Embedder

- HDMI 18Gbps Audio Embedder with HDCP 2.2
- Embeds multi-channel optical (SPDIF) or Line analog audio to HDMI output
- Optical audio supports LPCM 2CH, Dobly Digital 2/5.1CH, DTS 2/5.1CH
- Analog audio supports PCM2.0
- HDMI 2.0b (18Gbps), HDCP 2.2 and DVI 1.0
- Video resolutions up to 4K2K@50/60Hz (YUV444)
- HDMI High Bit Rate(HBR) audio pass-through
- 10bits HDR (High Dynamic Range) pass-through
- Supports CEC bypass

Embedders/ De-Embedders

Compare Models

MODELS	iTrans AD01	iTrans AD02	iTrans AE01
Type	Audio De-embedder	Audio De-embedder, with Audio Downmix	Audio Embedder
HDMI IN	1x HDMI, 4K60	1x HDMI, 4K60	1x HDMI, 4K60
HDMI OUT	1x HDMI, 4K60	1x HDMI, 4K60	1x HDMI, 4K60
Audio Out	1x 3.5mm L/R, 1x SPDIF	1x 3.5mm L/R, 1x SPDIF	
Audio IN			1x 3.5mm Line in, 1x SPDIF

SDI Distribution

iTrans DH

3G SDI to HDMI converter

- Support 3G/HD/SD SDI signal input
- Input and output resolution adaptive, output up to 1080P60
- Support 1-CH HDMI output
- Support 1-CH SDI loop out
- TYPE C (5V) power supply
- 1/4 fixed screw hole
- Support both Level A and Level B inputs

iTrans HD

HDMI to 3G SDI converter

- Support 1-CH HDMI to 2-CH SDI outputs
- Input and output resolution adaptive, output up to 1080P60Hz
- TYPE C(5V) power supply
- 1/4-inch fixed screw hole

iTrans D401

4x1 3G SDI Multiviewer w/ seamless switching

- 4x 3G SDI inputs
- 2x 3G SDI mirror outputs
- 1x HDMI output
- Single image, Dual-image PIP, Dual-image POP, Quad-image split view
- Auto-cycle of single-image modes
- Adaptive input signal, optional output resolutions
- Seamless switching without any black screen intervals
- DIP switch to set output resolutions
- With network control software
- Supports SD/ HD/ 3G SDI
- 3G SDI Level A
- With both DV and USB C power supply

iTrans D104

1x4 3G SDI Splitter

- 1x Standard 3G/HD/SD SDI Signal Input
- 4x Standard 3G/HD/SD SDI Signal Outputs
- Support format 1080P/1080I/720P/480I/576I
- Support Special Formats Such As 1080PSF/720P 30/25/24HZ.
- SDI Input Signal Auto-Detected.
- SDI Jitter Clean
- Supports 3G SDI Level A And B

USB Capture

iSwitch UVC03S

1080P SDI to USB3.0 Video Capture

- 1080P SDI to USB3.0 Video Capture
- SDI video input capture and SDI loop output.
- Resolution 480i~1080p60Hz input video capture.
- SDI input broadcasting standard SMPTE ST 425.
- Supports analog stereo audio inputs.
- Supports analog stereo audio extract from SDI
- Compatibles Windows, Linux, OS X
- Compatibles USB3.0 transmission rate up to 300-350MB/s.
- Compatibles VLC, OBS, XSPLIT and AMCAP etc.
- Plug and play, no drive and setting installation required.

iSwitch UVC03

1080p HDMI 4K to USB 3.0 Capture

- HDMI to USB 3.0 Capture
- HDMI video input capture and HDMI loop output.
- Resolution 480i~1080p60Hz format video capture.
- 4K2K@60Hz (Down Scaler)->1080p60Hz
- HDMI input and HDMI loop output HDMI 2.0, HDCP 2.2, resolution up to 4K2K@60Hz(4:4:4).
- Supports analog stereo audio input.
- Analog stereo audio extract output from HDMI
- Compatibles Windows, Linux, OS X
- USB3.0 transmission rate up to 300-350MB/s.
- Compatibles VLC, OBS, XSPLIT and AMCAP etc.
- USB capture max. 1080p (1920x1080/60)

iSwitch UVC03K

4K Ultra HD USB 3.0 Video Capture

HOT

- USB 3.0 4K Ultra HD Video Capture
- One HDMI Input, one HDMI Loop Output.
- Use USB 3.0 to record full HD images at high speed
- Support most software, such as VLC, OBS, etc
- No need to install the driver, plug and play.
- Record NV12, YUY2, XRGB/RGB32 video formats.
- Support HDMI 4K/60hz resolution input.
- Support Capturing 4K/30Hz resolution.
- High-quality aluminum alloy material
- Support 3.5mm/TRS microphone input
- Support 3.5mm/TRS headphone output

MODELS	iSwitch UVC03	iSwitch UVC03K	iSwitch UVC03S
IN	1x HDMI, 4K60	1x HDMI, 4K30	1x SDI, 1080P/1080i
Loop Out	1x HDMI, 4K60	1x HDMI, 4K30	1x SDI, 1080P/1080i
Audio IN	1x 3.5mm	1x 3.5mm	1x 3.5mm
Audio Out	1x 3.5mm	1x 3.5mm	1x 3.5mm
USB capture	USB 3.0 A, 1080P	USB 3.0 A, 4K30	USB 3.0 A, 1080P

Displays

iWall HD55

55' LCD FHD Video Wall

NEW

• Ultra-narrow bezels: The iWall HD55 LCD display features a thin-profile design and a screen-to-screen bezel width of as little as 3.5mm. This design minimizes the appearance of "seams" on the video wall, creating an immersive visual experience.
• Complete interfaces, digital loop-through: Supports HDMI and DVI input ports, suitable for various application scenarios.
• Built for easy serviceability: Our advanced architecture enables the power supply and electronics to be housed in an easily serviceable equipment rack, minimizing service disruption and noise.
• RS232 Loop: With RJ45 RS232 in/out ports, easy to connect the central controller.

iMeeting PD156

15.6" retractable conference screens

NEW

• The 15.6-inch LCD screen adopts a high-end full-viewing angle high-definition screen with a resolution of 1920*1080. It has an ultra-narrow bezel screen and a full lamination process. It has good color reproduction and no dust entering or the touch screen falling off.
• The screen frame is designed and processed with ultra-narrow edges, the screen glass edge is curved, the gap between the screen and the screen frame is tiny, and the surface is combined with fine sand anodization to make the visual effect more beautiful.
• It adopts the lifting method of precision linear guide rail combined with chain transmission. The multi-point balanced lifting system is stable and reliable, and the lifting is smooth and without jitter.
• All lines are designed with a low current power system, a 12V power supply, no leakage hazard, and are safe and reliable.
• With 2x HDMI inputs, support 2x PC signal switching.
• The desktop panel integrates the power switch of the PC host (Not included) and the metal push-pull USB cover, which can be used to switch on and off the PC and temporarily upload and download files. It also avoids using plastic USB dust-proof covers that may fall off.
• Anti-obstacle design. If an obstacle blocks or falls into the chassis, it will stop operating within a certain period to avoid damage to the equipment.
• Multiple control methods, supporting independent control by screen buttons or centralized control by IR remote control and central control.

Stand & Mounts

iMount 3710

Compact webcam tabletop tripod

- Mini webcam tripod with extensile fiber legs and rubber feet
- Compact & lightweight. Maximum load-bearing capacity: 3kg.
- Stable desk stand: Mini ball head/ 360-degree rotation/ 90-degree tilt
- 3-section legs, supporting a minimum height of 110mm to maximum 710mm.
- Perfect for vlogs, video calls, product displays, and live streaming.
- Apply to: All brand webcam or imaging devices including INFOBIT iCam 30, iCam 30AF, iCam 50, iCam 200, iCam 200U, iCam 200H, iCam 360, iSpeaker M700 and more.

iMount UC

Dual Screen Wall Mount for Video Conference

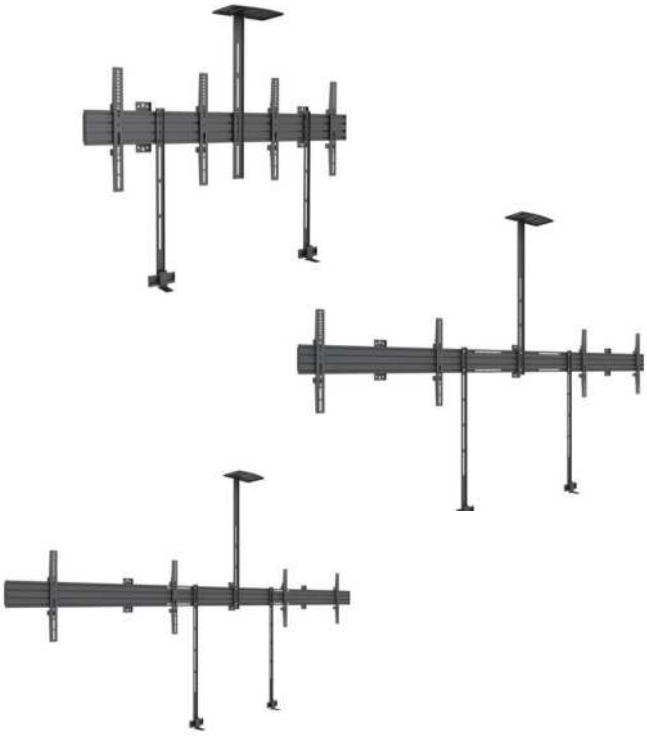

- Dual Screen Wall Mount for Video Conference
- With adjustable camera shelf and soundbar holder
- Screen size up to 90"
- Max. load 50 to 70kg
- Modular assembly for small to large installations
- Includes VESA mounting adapters - up to 900mm x 600mm
- Integrated cable management system
- Portrait or landscape orientation
- Anti-theft mechanism and installation
- Support height adjustment
- Options: for 55", 75" and 90" display

iMount VW60/90

Pop-out Front View Video Wall Mounts, VESA 600x400/ 900x400

- iMount VW series suitable for 42-90 displays
- Modular mount for unlimited wall display configurations
- Suitable for landscape or portrait screen mounting
- Push to open/close system provides quick and easy service access
- Micro-adjustments at 8 points for seamless display alignment
- Suitable for both wall or pole mounting
- Integrated cable management
- Anti-theft design
- Includes interface Adaptor Arms as standard for use with a screen with VESA 600x400 or 900x400 fixings

iMount FS150

Floor Stand Mobile Cart w/ Camera Tray & Soundbar Shelf, 150cm

- Modular assembly for small to large installations
- Includes VESA mounting adapters - up to 1,000mm x 600mm
- Integrated cable management system
- Portrait or landscape orientation
- Anti-theft mechanism
- Screen size 32-100"
- Weight capacity for single screen: 120kg
- Weight capacity for multiple screens: 30kg per screen
- With Camera and Soundbar tray

iMount AM70

Articulating Mount w/ Swivel Long Extension Arm, 32-70

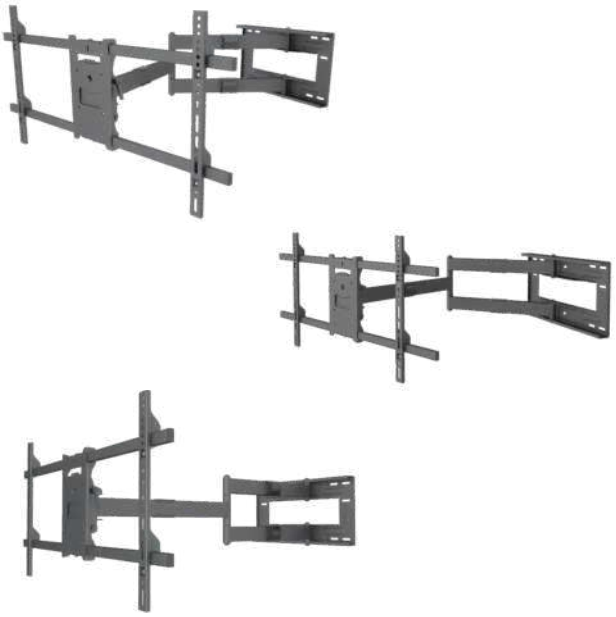

- Single Articulating Arm
- Sturdy, durable and versatile
- Holds up to 35kg for ultimate stability
- Tilts, slides, swivels, and extends for ultimate viewing pleasure
- Mounts to 16inch - 24inch studs
- Screen size: 32-70"
- Swivel 180˚, Tilt -5 to +10˚

iMount AM90

Articulating Mount w/ Swivel Long Arm, 42-90"

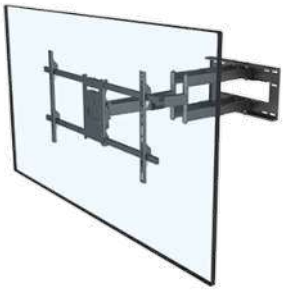

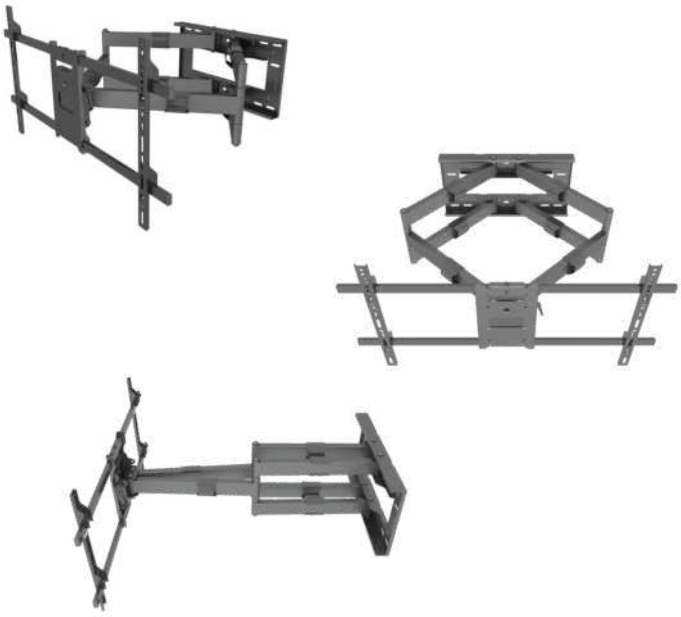

- Dual Articulating Arms
- Sturdy, durable and versatile
- Holds up to 80kg for ultimate stability
- Tilts, slides, swivels, and extends for ultimate viewing pleasure
- Mounts to 16-24 studs
- Screen size: 42-90"
- Swivel 120˚, Tilt -5 to +10˚

Cables & Adapters

AOC-DP-Dxx

Detachable DP 8K AOC

• DisplayPort 1.4, 32Gbps, Active Optical Cable, mini DP to mini DP with mini DP to DP detachable connectors;
• Max. 100m/ 328ft long distance, 4K/30/60/120Hz or 8K/60Hz 4:4:4;
• External power supply optional, supports 3D, HDCP 2.2, EDID, HDR and CEC;
• Hot-swappable, plug & play;
• Available lengths up to 10m, 15m, 20m, 30m, 40m, 50m, 60m, 70m, 80m, 90m, 100m

AOC-DP-Fxx

Fixed DP 8K AOC

DisplayPort 1.4, 32Gbps, Active Optical Cable, DP to DP fixed connectors;
Max. 100m/ 328ft long distance, 4K/30/60/120Hz or 8K/60Hz 4:4:4;
External power supply optional, supports 3D, HDCP 2.2, EDID, HDR and CEC;
Hot-swappable, plug & play;
Available lengths up to 10m, 15m, 20m, 30m, 40m, 50m, 60m, 70m, 80m, 90m, 100m

AOC-CHDMI-xx

4K60 Type C to HDMI AOC

NEW

- 4K60 Type C to HDMI AOC
- Complies with DP 1.2 specification and is compatible with DP Alternate Mode
- Support 4K@60Hz/4K@30Hz/1080p/1080i/720p
- Support HDCP2.2
- Support HDR (High-Dynamic-Range) display, HDMI 3D dual View
- No RF interference, working stable in complex environments
- Available lengths up to 3m, 5m, 10m, 15m, 20m, 25m, 30m.

AOC-HDMI-DxxC

HDMI 2.0 D to D Classic

- HDMI Type D to D, both sides detachable.
- HDMI 2.0, 19+1 Pin, 18Gbps Active Optical Cable.
- Max. 100m/ 328ft long distance, 4K/30/60Hz 4:4:4.
- Supports 3D, HDCP 2.2, EDID, HDR and CEC.
- External power supply optional.
- Hot swappable, plug & play.
- Available lengths: 10m, 15m, 20m, 25m, 30m, 40m, 50m, 60m, 70m, 80m, 90m, 100m

AOC-HDMI-AA8K-xx

HDMI 2.1 A to A 8K AOC

- HDMI 2.1 specification with 48Gbps mass-capacity bandwidth.
- Up to 100m Maximum Length
- Up to 8K@60Hz or 4K@120Hz unparalleled visual, as well as VR and 3D
- With Dynamic HDR
- With eARC
- Plug and Play
- Available lengths: 10m, 15m, 20m, 25m, 30m, 40m, 50m, 60m, 70m, 80m, 90m, 100m

AOC-HDMI-Fxx

HDMI 2.0 A to A fixed

- HDMI 2.0, 19+1 Pin, 18Gbps Active Optical Cable.
- HDMI Type A to A fixed connectors.
- Max. 100m/ 328ft long distance, 4K/30/60Hz 4:4:4.
- Supports 3D, HDCP 2.2, EDID, HDR and CEC.
- External power supply optional.
- Hot swappable, plug & play.
- Available lengths: 10m, 15m, 20m, 25m, 30m, 40m, 50m, 60m, 70m, 100m

AOC-HDMI-DDxxL

HDMI 2.0 4K D to D w/ iLock

- HDMI Type D To D W/ ILock, Both Sides Detachable.
- HDMI 2.0, 19+1 Pin, 18Gbps Active Optical Cable.
- Max. 100m/ 328ft Long Distance, 4K/30/60Hz 4:4:4.
- Supports 3D, HDCP 2.2, EDID, HDR And CEC.
- External Power Supply Optional.
- Hot Swappable, Plug & Play.
- Available Lengths: 10m, 15m, 20m, 25m, 30m, 40m, 50m, 60m, 70m, 80m, 90m, 100m

AOC-HDMI-AAxxK

HDMI 2.0 4K Armoured AOC

NEW

- AOC Technology:
- 4K Performance: Fully supports the HDMI 2.0 standard, including 4K resolution at 60Hz, 18Gbps bandwidth, and HDR (High Dynamic Range).
- Armoured Protectio
- Plug-and-Play: Draws power directly from the connected HDMI source and display, eliminating the need for an external power supply.
- Robust Materials
- Available lengths: 5, 10, 15, 20, 25, 30, 40, 50, 60, 70, 80, 90, and 100m.

iFiber Y

USB3.2 A+C to C AOC cable

NEW

- USB3.2 A+C to C AOC cable, 10Gbps
- Small-factor USB C head
- The iFiber Y is designed with a "Y" shape of both USB A and C at the host head. To join or host a video meeting, simply plug the iconic Y connector into any laptop with a either Type A or Type C port, compatible with all PC models.
- The iFiber Y works with cameras, microphones, speakerphones of brands of INFOBIT, Logitech, Poly, Aver, Huddly, Bose, Neat, Yealink, Jabra and more.
- Available in lengths of 10, 25, and 40 meters.

AOC-USB31-CCV-xx

USB 3.1 C to C for video

- USB 3.1 C to C Active Optical Cable for Audio Video Transmission
- Supports 4K@60H, note that this cable only carries video.
- Transmits up to 30m/100 feet.
- Meet DP1.2 Standard, bandwidth can reach to 21.6Gbps super speed
- Support HDCP/EDID/CEC/3D
- Support two sides plug and play, no PD
- Available lengths: 5m, 10m, 15m, 20m, 25m, 30m

AOC-USB31-CCD-xx

USB 3.1 C to C for data

- Meet USB 3.1 Gen2 Standard, bandwidth 10Gbps
- Support length up to 30m
- Support USB 2.0 & 3.0
- Support two sides plug and play
- Can provide 5V 800mA power maximum to the remote device
- Does not support charging or powering of devices
- No RF interference, working stable in complex environments
- Available lengths: 5m, 10m, 15m, 20m, 25m, 30m

AOC-USB31-CCDV-xx

USB 3.1 C to C for Video + Data + PD

NEW

- Highly resistant to EMI and RFI
- USB 3.2 Gen 2 up to 10 Gbps
- USB-C compliance with DisplayPort 1.4 Alternate Mode (DP Alt Mode) for resolutions up to 8K@60Hz
- Bidirectional USB power flow
- Supports USB Power Delivery (PD) and Quick Charge (QC) up to 60 W, 20V 3A Charges a USB-C powered device
- Data + Video + PD
- USB-C male to USB-C male
- Bi-directional design
- Available lengths: 3m, 5m, 7m, 10m

U31-AMAF32-xx

USB 3.1 AMAF USB 3.0, 2.0 (Not 1.0)

NEW

• USB 3.1 A Male to A Female AOC, downward compatible with USB 3.0, 2.0 (Not 1.0)
• USB 3.1 Gen2 Standard, bandwidth to 10Gbps super speed
• Support 5V 900mA max
• No RF interference, working stable in complex environments
• Available lengths 5m, 10m, 15m, 20m, 25m, 30m, 40m, 50m

U31-AMBM32-xx

USB 3.1 10G AM tO BM AOC

NEW

USB 3.1 A Male to B Male AOC, downward compatible with USB 3.0, 2.0 and 1.0
USB 3.1 Gen2 Standard, bandwidth to 10Gbps super speed
Support 5V 900mA max
No RF interference, working stable in complex environments
Available lengths 5m, 10m, 15m, 20m, 25m, 30m, 40m, 50m

iCable- USB-ACCxx-AC

USB 3.0 5Gbps Active Extension Cable AM to CM

NEW

- True Plug–and–Play — No additional drivers needed.
- USB 3.2 Gen 1x1 (Also named as 3.1 Gen 1 or USB3.0)
- SuperSpeed USB 3.0 data transfer rate up to 5Gbps
- Pulls power from the source side
- A USB External Power as an option
- USB A Male to USB C Male, with an external USB A power supply.
- Available lengths: 5m, 10m, 15m

iCable- USB-ACCxx-AA

USB 3.0 5Gbps Active Extension Cable AM to AM

NEW

- True Plug–and–Play — No additional drivers needed.
- USB 3.2 Gen 1x1 (Also named as 3.1 Gen 1 or USB3.0)
- SuperSpeed USB 3.0 data transfer rate up to 5Gbps
- Pulls power from the source side
- A USB External Power as an option
- USB A Male to USB A Male, with an external USB A power supply.
- Available lengths: 5m, 10m, 15m

iCable- USB-ACCxx-AB

USB 3.0 5Gbps Active Extension Cable AM to BM

NEW

- True Plug–and–Play — No additional drivers needed.
- USB 3.2 Gen 1x1 (Also named as 3.1 Gen 1 or USB3.0)
- SuperSpeed USB 3.0 data transfer rate up to 5Gbps
- Pulls power from the source side
- A USB External Power as an option
- USB A Male to USB B Male, with an external USB A power supply.
- Available lengths: 5m, 10m, 15m

iCable- USB-ACCxx

USB 3.0 Extension Cable AM AF

- iCable Active USB 3.2 Gen 1x1 (Also named as 3.1 Gen 1 or USB3.0) extension cable, max 40 meters or 130 ft.
- SuperSpeed USB 3.0 data transfer rate up to 5Gbps
- Backward compatible with USB 2.0 peripherals and cables.
- True Plug–and–Play — No additional drivers needed.
- Pulls power from the source side
- A USB External Power as an option
- Available lengths: 5m, 10m, 15m, 20m, 25m, 30m, 40m.
- Compatible with Logitech camera (Max. 30m tested).

iCable- USB-ACC-H14

USB 3.0 Extension Cable w/ Hub

• iCable Active USB 3.2 Gen 1x1 (before 3.1 Gen 1 or USB3.0) extension cable hub, 10 meters.
• SuperSpeed USB 3.0 data transfer rate up to 5Gbps
• Extend 4 USB 3.0 devices up to 10m from a desktop, laptop, or remote terminal to a PTZ camera, microphone, speakerphone,
• True Plug–and–Play: No additional drivers are needed.
• Pulls power from the source side, and a USB micro external power as an option.
• Available lengths: 10m/33ft
• Can extend up to 35m when working with iCable USB ACC cable.
• Compatible with INFOBIT products and Logitech cameras.

iCable- U4-CC20xx (CC40xx)

240W 40Gbps or 20Gbps USB4 Cable

HOT

- Certified Reliability
- USB-IF certified to ensure maximum functionality
- 40Gbps or 20Gbps Data Transfer
- Data transfer speed up to 40Gbps or 20Gbps.
- USB C to C male
- 240W Power Delivery
- Up to 240W(48V/5A) charging compatibility, it powers Thunderbolt 3 devices without an additional power supply and fast charging for laptops/tablets and fast charging for mobile phones
- Support 8K@60Hz Display.

iCable U3S-AB

High-end Super-soft USB 3.0 Cables, A to B

- Universal Compatibility: The USB A male to B male cable connects computers with a USB 3.0 port (also compatible with USB 2.0) to a variety of USB peripherals.
- Durable and Flexible Design: Engineered with premium materials, this USB-to-USB cable features molded strain-relief connectors for added durability and long-lasting performance.
- Superior Signal Performance: The USB Type A-B cable features a combination of gold-plated connectors, bare copper conductors, and foil & braid shielding enhances cable performance, providing error-free data transmission and fast charging speed. Enjoy stable, high-quality connections every time.
- Super-soft design.

iCable U3S-AC

High-end Super-soft USB 3.0 Cables, A to C

High-Speed Data Transfer: up to 5Gbps
Universal Compatibility: The USB A male to C male cable connects computers with a USB 3.0 port (also compatible with USB 2.0) to a variety of USB peripherals.
Durable and Flexible Design: Engineered with premium materials, this USB-to-USB cable features molded strain-relief connectors for added durability and long-lasting performance.
Superior Signal Performance: The USB Type A-C cable features the combination of gold-plated connectors, bare copper conductors, and foil & braid shielding enhances cable performance, providing error-free data transmission and fast charging speed. Enjoy stable, high-quality connections every time.
Super-soft design.
Varied Selection of Lengths – Available in versions of 1m, 2m, 3m.

iCable H4KS

High-end Super-soft HDMI 4K Cables

NEW

- Resolution 4K@60Hz (4:4:4)
- High-Quality Connectors – 24K gold-plated connectors resist corrosion and offer the best possible connectivity.
- Supports HDMI Ethernet
- Supports ARC (Audio Return Channel)
- Super-soft design.
- Varied Selection of Lengths – Available in versions of 1m, 2m, 3m, 5m, 7m and 10m.

iCable H8KS

High-end Super-soft HDMI 8K Cables

NEW

- Resolution 8K@60Hz and 4K@120Hz (4:4:4)
- HDMI 2.1 spec, 48Gbps bandwidth
- Support Dynamic HDR, Dolby Vision, HDR10, 3D Video
- High-Quality Connectors – 24K gold-plated connectors resist corrosion and offer the best possible connectivity.
- Supports HDMI Ethernet
- Supports ARC (Audio Return Channel) and eARC
- Supports Variable Refresh Rate (VRR)
- Auto low latency Mode (ALLM)
- Quick Frame Transport (QFT)
- Quick Media Switching (QMS)

iCable H4K-0xx

HDMI copper cable, 4K

- 4K versions:
- HDMI 2.0 A to A copper cable
- HDMI 19-pin Type A Male to Male
- 18Gbps, 2.0V, 3D, Deep Color; HDCP 2.2 compliant
- Superior video quality – True 4K (4096 x 2160 @ 60Hz; 3840 x 2160 @ 60Hz 4:4:4)
- PVC jacket, 26AWG
- Gold-plated connectors for reliable transmissions
- Available in lengths: 1m, 2m, 3m, 5m, 7m, 10m
- Customized lengths are available as requested.

iCable H8K-0xx

HDMI copper cable, 8K

- 8K versions:
- HDMI 2.1 A to A copper cable
- HDMI 19-pin Type A Male to Male
- 48Gbps, 3D, Deep Color; HDCP 2.2 compliant
- Superior video quality – 8K60Hz or 4K120Hz
- PVC jacket
- Gold-plated connectors for reliable transmissions
- Available in lengths from 0.5m(29AWG), 1m(29AWG), 1.5m(29AWG), 2m(29AWG), 3m(28AWG) to 5m(26AWG)

iCable AR11

HDMI Adapters Ring BYOD

- 1 DP Male to HDMI A Female, 4K30
- 1 Mini DP Male to HDMI A Female, 4K30
- 1 Mini HDMI Male to HDMI A Female, 4K30
- 1 USB Type C Male to HDMI A Female, 4K30
- 1 Adapter Line Clamp with sticker, tools-free
- 1 Security Cable

iHub 301

3-in-1 USB C Hub w/ PD

HOT

- 3-in-1 USB C adapter w/ PD
- 1x USB C host
- 1x HDMI: 4K30Hz downward compatible with 1080p, 1080i, 720p
- 1x RJ45: 1,000Mbps
- 1x USB A: USB 3.0, 5Gbps, downward compatible with USB2.0/1.1; Power supply up to 4.5W max.
- 1x PD3.0 USB C: 100W power in; charging limited to 87-96W for safety.

Testing Tools

iTools G8K

HDMI 2.1 8K Signal Generator/ Analyzer/ Tester

NEW

1- Support resolution up to 8K@50/60Hz 4:2:0 10-bit and 40Gbps video bandwidth, as specified in HDMI 2.1
2- Up to 64 video resolutions and 33 patterns
3- Color space: RGB/YCbCr444/YCbCr422/YCbCr420
4- Color depth: 8/10/12-bit
5- Built-in HDR test function in HDMI 2.1
6- HDMI audio source can be from the internal audio or external S/PDIF input audio
7- The internal audio signal supports LPCM 2CH format, 48kHz sample rate and 16bits width
8- Support HDCP 2.3/1.4 encryption verification pass or fail indication
9- With EDID Read/Write functionality
10- Support analyzing Timing/Format/Info frame/HDCP of HDMI input signal
11- Support CEC control
12- Control via front panel buttons
13- Portable design, built-in lithium battery of 2910mAh

Wireless Charging

iMeeting W60

Embedded 3-in-1 Pop-up Wireless Charger, 60mm

- Elegant in–table solution
- Easy to Install — Drill a hole in 60mm
- Qi Standard Compliant
- 1x Wireless Charging
- 2x USB A charging

infobit

infobit

CONTACT & FOLLOW US

info@infobitav.com

Copyright @ 2025 INFOBIT AV. All rights reserved. This catalog is subject to change without prior notice.